Federation Internationale de
Roller Sports

THE CIPA SYSTEM OF SCORING

AN OFFICIAL
International Artistic Committee (CIPA)
BOOK
Official Scoring Rules For Determining
Placement Of Competitors

in

ROLLER SKATING COMPETITION

For: Skate Dancing
Figure Skating
Singles Free Skating
Pairs

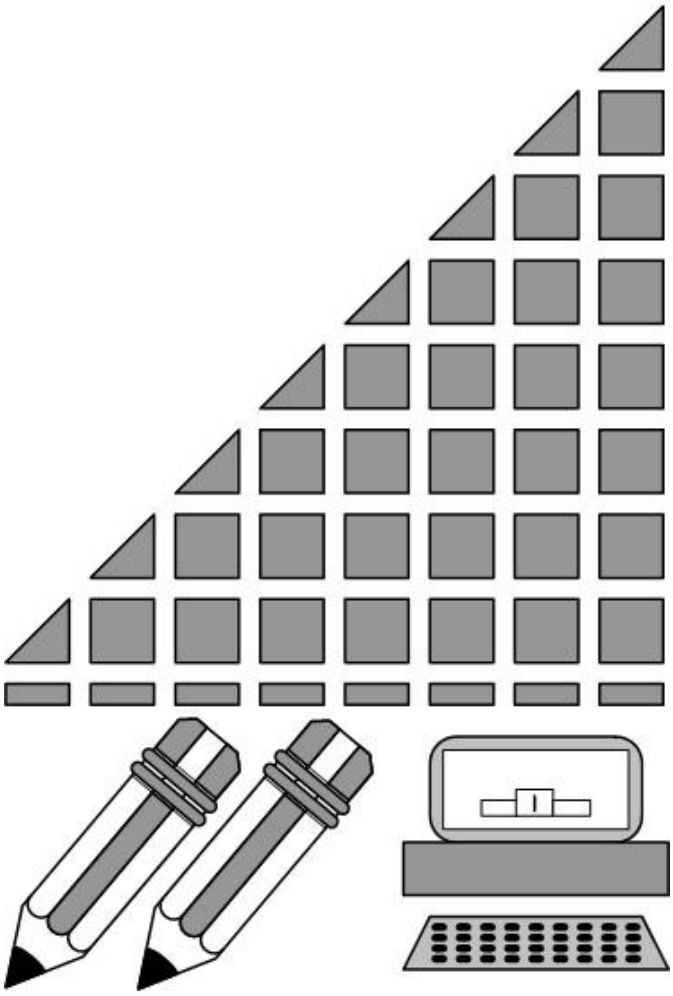

THE CIPA SYSTEM OF SCORING

The information published herein supersedes all previous information in accordance with ruling by the Board of Control of CIPA and is in effect with the issue of this book.

2009 - EDITION II – 2009
Reprint with Changes

The purpose of this Official Manual is to compile in one publication all of the latest information on Scoring and Conducting a CIPA Sanctioned Meet.

The Sport of ROLLER SKATING is very dynamic and progressive. For this reason, additional clarifications may be needed; and even changes and additions will be found to be necessary to be presented for CIPA action in the future.

CIPA is an organization formed to protect and govern Amateur Roller Skating Competitions, Exhibitions and Tests where the Confederation has been legally authorized to function under the auspices of the Federation Internationale de Roller Skating (F.I.R.S.).

Richard Gussmann
CIPA CHIEF CALCULATOR
Max-Beckmann-Strasse 31
D-76227 Karlsruhe
Germany
Email: richard.gussmann@web.de

Table of Contents

CIPA OFFICIAL SCORING RULES and PROCEDURES. .4
SCORER'S DUTIES.....4
DICTIONARY.....5
ABBREVIATIONS.....7
METHODS OF SCORING.....7
OPEN SCORING.....7
SEMI-OPEN SCORING.....8
CLOSED SCORING.....8
GENERAL PREPARATION 9
PREPARATION OF SCORE SHEETS 9
STEP BY STEP 10
Special Regulations used at the
World Games.....14
Example A-1.....15
Example A-2.....16
Example A-3.....17
B-1: Individual Score Sheet "FIGURES, FREESKATING
AND COMBINED".....18
B-2: Individual Score Sheet "DANCE" Skater "V".....19
B-3: Individual Score Sheet "DANCE" Skater "W".....20
B-4: Individual Score Sheet "DANCE" Skater "X".....21
B-5: Individual Score Sheet "DANCE" Skater "Y".....22
B-6: Individual Score Sheet "DANCE" Skater "Z".....23
C-1: Compulsory Figures MASTER CHART TABLE OF
VICTORIES.....24
C-2: Singles (or Pairs) Short Program MASTER CHART
TABLE OF VICTORIES.....25
C-3: Singles (or Pairs) Short and Long Programs
Combined MASTER CHART TABLE OF VICTORIES.....26
C-4: Combination Figures and Singles (Short and Long
Program) MASTER CHART TABLE OF VICTORIES.....27
C-5: Dance Compulsory and O.D. MASTER CHART
TABLE OF VICTORIES.....28
C-6: Dance Compulsory O.D. and Free MASTER CHART
TABLE OF VICTORIES.....29
EXAMPLE D-1.....30
EXAMPLE D-2.....30
EXAMPLE D-3.....31
EXAMPLE D-4.....31
SIMPLIFIED GUIDE • "TABLE OF VICTORIES".....32
MASTER CHART TABLE OF VICTORIES 7 Judges 9
Contestants.....34
MASTER CHART TABLE OF VICTORIES 7 Judges 15
Contestants.....35
Individual Score Sheet Figures Free Skating and
Combined.....36
Individual Score Sheet Dance.....37
Individual Score Sheet Pairs.....38

CIPA OFFICIAL SCORING RULES and PROCEDURES

For all competitions under sanction by CIPA, it is required that experienced, competent and registered scorers be used to record and process the statistics of each competition. Therefore,

For all competitions under sanction by this Confederation it is required that CIPA commissioned Calculators be used to process the statistics of each competition in order to insure that this important assignment is handled accurately by experienced and competent personnel.

For Championship Meets, only those persons who are COMMISSIONED SCORERS shall be permitted to sit at the scoring table as calculators and official scorers.

For non-championship meets, students bearing credentials of status from qualified instructors may use the opportunity to gain experience: but adequate supervision by fully trained scorers should be provided.

Scorers at all sanctioned CIPA meets are required to hold a valid card of registration in one of the branches of the Confederation.

For information on the examinations leading to the various scoring commission refer to the chapter "SCORING COMMISSIONS" in this manual.

To this end, CIPA has prepared Calculators Commission examinations, based upon the contents of this manual, that leads to certification of an individual as an authorized championship calculator. The calculating examination consists of calculating actual competitive situations, and testing the applicant's accuracy, speed and knowledge of these rules. For information on the examination leading to a Calculator's Commission and for sample study guides, write to the C.I.P.A. Headquarters, 1303 Main St., Redwood City, CA 94063-2115 U.S.A.

The main purpose of the Scoring Commission is to obtain persons of integrity and sound principles with real concern and dedication for the Art of Effective Scoring to fill the important and vital function of scoring all CIPA championships meets. The examination and the pre-requisite requirements are designed to produce efficient scorers and not just card holders.

These rules clearly define the exact method of finding a winner under the use of and with the greatest accreditation to majority rule. Least consideration is given to "total score," thus minimizing the effect of the minority. The rules detailed herein are compulsory.

The information contained in this manual defines the exact procedures to be followed in determining the placements of a contest using the principle of MAJORITY RULE. Final placements will reflect the opinions of a majority of the judges officiating. Least consideration under these rules is given to total scores, thus minimizing the influence of an individual judge should he or she award scores that are not in keeping with those assigned by the majority of judges. The rules detailed herein are compulsory.

SCORER'S DUTIES

Two or more trained, experienced, and competent Scorers shall be appointed to record and process the statistics correctly of ALL contests in the official Championships. Scorers shall have the following duties and authorities:

A. To prepare score sheets for each event as provided and directed in this official book, CIPA Scoring Manual, or to check the readiness of such sheets if previously prepared.
B. To record and tabulate scores and results as provided in the scoring rules and procedures as published.
C. To give to the designated official, a list of placements for each division of competition immediately upon completion and checking of the score sheets events of such division.
D. To cause to be posted publicly all score sheets as soon after their completion as possible.
E. To arrange or assist in the arrangement of order of skating, flights, or heats as provided in the scoring rules and procedures as published, unless a steward has been appointed for that purpose.
F. To prepare the records and list of placement Winners for forwarding to the office of CIPA. The list placement winners shall be in numerical placement order.
G. To follow all necessary procedures and abide by all rules as set forth and detailed in this official book.
H. The scorer may restrict presence at the scoring stand to duly authorized officials, and may direct the the removal of any person or persons who may harass or interfere with the tabulators in the performance their duties.
I. The chief scorer may restrict presence at the scoring stand to duly authorized officials.

DICTIONARY

ARTISTIC IMPRESSION (Manner of Performance)
The way or style in which a skater executes the movements of free skating, OD, free dance routines. The grade given for execution of free skating, OD or free dance routines.

CONTENTS OF PROGRAM (See Technical Merit)
a. The actual items or ingredients performed by a skater or team in a free skating (singles or pairs) routine.
b. The grade given by a judge for the items which constitute such a routine.

CONTEST
a. The complete skating of all events of a division of a championship.
b. The skating of a specifically designated dance or dances, figure or figures, or kind of free skating before judges for placement of the contestants or contestant teams in order of skill.

CONTESTANT
Any Skater who participates in one or more events of a contest.

CONTESTANT TEAM
Any two skaters who participate in one or more events of a contest as a unit, as required by the specific rules for the given contest.

DRAWING PROCEDURE
The method by which the skating order of the Contestants or Contestant teams is to be and is determined, as prescribed by rule.

EVENT
Any one part of a contest: that is, elimination, semi-final. final, or any subdivision in the skating of a contest, but not the performance by each individual entry.

FLIGHT (Dance competition)
The skating of one, two, three or four teams at the same time in an event of a dance contest.

FREE SKATING
Individual and original composition of movement and pattern without prescribed routine and skated to music of the individual's choice.

GRADE
The numerical value assigned to an individual test or competition requirement by an individual judge.

INDIVIDUAL SCORE (abbreviation I.S.)
The grade assigned by a judge to an individual requirement of a test or competition; i.e. to each dance, each figure, artistic impression, technical merit.

JUDGE
An official commissioned to determine the value of a skater's performance, or to assign an order of placement to contestants or contestant teams in a contest

MAJORITY
The number which is the lowest whole number greater than on-half of the given number (two of three, three of five, four of seven, etc.)

MAJORITY VICTORIES
The number which is the lowest number greater than one-half of the given number of judges judging an event in a roller skating competition. It is to be said that the contestants receiving this number has the "Majority of Victories" by the involved judges and in the eyes of these judges is a better skater than all lesser decisions.

MANNER OF PERFORMANCE (Artistic Impression)
a. The way or style in which a skater executes the movement of a free skating routine or free dance.
b. The grade given for the execution of a free skating routine or for OD/OSP, or free dance.

MARK
The total of grades given by a judge to a skater or team in a test or event of a contest. Same as SCORE.

MAXIMUM
a. **Grade -** The highest grade or mark a skater can receive from any one judge.
b. **Time** (free skating - The greatest amount of elapsed time which may be utilized by a skater in the performance of a routine. The longest time a judge is allowed to observe a skater or team in the performance of a routine.)
   1. The allowable time for a requirement of a test.
   2. The total elapsed time within which all the requirements of a test must be fulfilled.

MEET
A competition where more than one contest is scheduled to be conducted.

a. Closed: A meet where eligibility must be established through previous competitive placement.
b. Open: A meet where eligibility does not require participation in a previous qualifying competition.

MINIMUM

a. **Grade**
The lowest grade or mark a skater or team can receive from any one judge.
b. **Time** (free skating)
The least amount of elapsed time which may be utilized by a skater or team to receive any credit for a routine.

OFFICIAL
Bearing approval or authority. Any person commissioned to administer, execute, or apply rules and regulations.

a. Contest - A contest which is part of or leads to or toward the CIPA Championships.
b. Rule - A published regulation limiting, controlling or affecting the entry, participation, conduct or procedure of a test, contest or membership or associate membership.
c. Ruling - An interpretation or directive by an authorized official or official body made in accordance with published rules.
d. Test - The proficiency tests as established and prescribed.

PLACEMENT
The rank achieved by a contestant or team.

POINT TOTAL (Abbreviation P.T.)
The total of the SUMS of all judges for a single contestant - Same as TOTAL POINTS.

PROFICIENCY TEST
A group of dances, school figures, free skating items, intended to classify the level of achievement of an individual skater.

QUALIFICATION

a. **Competition**
1. The act of meeting the requirements for entry into a contest.
2. The act of advancing from one event to the next in a contest.
b. **Proficiency Tests**
The act of meeting the requirements for any proficiency test including any prerequisites to the test skated.

QUALIFY
To meet the requirements for participation in any category in a function of CIPA.

QUALIFYING PLACEMENT (Competition)

a. Place in an event which is high enough to permit advancement to the next event of the same contest.
b. Placing 1st, 2nd, or 3rd in any contest which permits advancement to the same contest in the next higher ranking championship.

RECORDING (Scoring)
The act of entering judges' grades on score sheets or cards, including tabulation and completion of records.

REFEREE
A commissioned official appointed by the director of a contest or proficiency test center to discharge the duties as required by rule and prescribed for the tests or contests to be skated.

REQUIREMENT

a. An individual dance, figure, or item of free skating which the skater must execute or perform in a contest or proficiency test.
b. Any rule or regulation which must be met by a member or associate member for any function of the respective organization.

ROUTINE
The presentation by a skater or team of any organized system of skating movements, either original or standardized.

SCORE
The total of grades given a skater by an individual judge for the requirements of a test or event of a contest. Same as MARK.

SCORER
An official who records the grades of the contestants as given by the judges onto official score sheets for tabulation.

SCORING

a. The act of recording and tabulating the marks of the judges in a contest or event of a contest and determining the results of such contest or event.
b. The assigning by the judge of individual grades to the various contestants or contestant teams in an event of a contest.

SINGLES
Free skating performed by individuals.

SKATING ORDER
The sequence in which contestants are to, or do perform, the required parts of a contest.

SUM
The total of the individual scores given by a single judge for a single contestant or contestant team.

TABULATION
The act or result of processing the judges' marks in an event of a contest, and thereby determining the “Order of Placement” of the contestants or contestant teams.

TABULATOR
An official whose duty is to process the judges' marks in an event of a contest, and thereby determine the order of placement of the contestants or contestant teams. The chief tabulator often has the additional duty to check in the skaters, supervise the drawing of skating order or arrangement of flights or heats, and preparing the official forms for each event.

TIMER
An official whose duty is to determine the elapsed time of any event or part of an event in accordance with the established rules for the contest in which he or she serves.

TIME
The time indicated by the stop watches and recording by the appropriate official.

TOTAL POINTS (TP)
The total of the sums of all judges for a single contestant. (Same as Point Total)

TECHNICAL MERIT (Contents of Program)

a. The actual items or ingredients performed by a skater or team in a free skating (singles or pairs) routine or in a free dance routine.
b. The grade given by a judge for the items in a free skating (singles or pairs) routine or in a free dance routine.

ABBREVIATIONS

Phrases and groups of words used throughout will be abbreviated as below:

Combination	Comb.
Contestant (s) or Contestant Team (s)	Cont.
Total Points	T.P.
Individual Scores	I.S.
Highest Open Place	H.O.P.
Judge	J.
Table of Majority Victories	T.M.V.
Majority Victories	M. V.
Separate Majority Victories	S.M.V.
Total Victories	T. V.
Original Set Pattern	OSP or **O.S.P.**
Original Dance	OD or **O.D.**

METHODS OF SCORING

There are several methods of transmitting the judges' marks (scores) to the Tabulators to record on the official CIPA score sheets.
They are known as:

OPEN SCORING
SEMI-OPEN SCORING
CLOSED SCORING

A brief description of each of the above methods follows:

For all artistic events each judge shall be furnished with a judge's scoring form, headed for the events, for personal marking of scores, a clipboard and several sharpened lead pencils.

OPEN SCORING

1. Each judge should be equipped with the following: A small box with shoulder strap, two sets of white cards with numerals on both sides (a) one set with BLACK numbers from 0 to 10 inclusive; (b) a second set with RED numbers from 0 to 9 inclusive. Those which are red represent the digits.
2. The routine for using the Open Method of scoring is as follows:
   A. The judge shall appear on the skating surface in plain sight when preparing to display his or her scores.
   B. After the skaters have completed the skating, the judge will take his place on the skating surface ready to display his or her scores. The judge will note the mark for the item to be announced (first dance, first figure, etc.) which he or she has recorded on his or her judge's sheet and with his back to the tabulators, and when called, shall select the proper OPEN SCORING CARDS for the mark to be displayed. We shall assume that the grade in this case is 8.4. Our judge will select a BLACK 8 and a RED 4. However, he must not pull these cards from the box until the Referee (or announcer) has announced Judges' Scores for "Skater Number Six". At this point, the judge will raise his or her scores (at least shoulder high) and keep them raised until the Referee (or announcer) has read them in this manner: "Judge Number One, 8.4; Judge Number Two, etc."
   C. Judges may be assisted by a "caddy" whose individual sole duty shall be to carry the OPEN SCORING CARDS and to display such cards as are indicated by the judge.
3. It shall be the duty of the referee and referee's assistant to check each judges' scores for correctness while the scores are publicly displayed and announced. After the scores have been publicly displayed and announced for all contestants, the referee shall collect each judge's sheet and then announce the judges' scores to the Tabulator by the Closed Scoring method.
4. This method is in use at present during Championship Meets.

SEMI-OPEN SCORING

1. Upon completion of a skating event, the judges (lowest number judge first, followed by the next highest, etc.) shall present their "judges Scoring Sheet" to the referee of the event, who shall give them to the announcer, (in the above order) who shall announce the judge's number, followed by the scores for all contestants in that event, over the PA system.
2. The referee shall observe the scores during the announcements and shall call immediately for a corrected announcement in event of an error on the announcer's part.
3. The judge shall stand by during the announcing of his score.
4. This method is very popular with those who are interested in copying the scores.

CLOSED SCORING

1. Closed scoring is identical to Semi-Open Scoring except that no public announcement is made of the judges' scores.
2. In Closed Scoring the referee or other assigned person shall announce the judges' scores to the Tabulators.
3. No judge shall leave the immediate vicinity of the scoring table until the referee and Chief Scorer shall ascertain that all scores are correlated and correct.
4. The Closed Scoring method is used where the events are large and on a tight or close schedule.
5. Regardless of the scoring method used for a contest, the appearance of the scores and the resultant tabulation will be the same on the CIPA Score Sheet. However, the procedure in recording the judges' scores will differ. In the Semi-Open or Closed methods, only one judge's scores are announced at a time. The reading of scores will be contestant, two, three, or four items recorded vertically, then moving horizontally to the next contestant for the same judge, until all the scores of that judge have been read and recorded. In the Open Method the scores are displayed by all judges by item.

The reading and recording is done vertically for each item for each **contestant all** judges simultaneously. In Dance and Figure events, the first item is scored for all contestants before the second and third items are scored. In Singles, Pairs and Free Dance events, Technical Merit (first item) then Artistic Impression (second item) are recorded consecutively for each contestant in order, all judges at the **same** announcement. Tabulators are cautioned when if the Open method is used be sure the scores arc placed properly by judge, contestant and item. From a scoring point of view there is less possibility of error in the Semi-Open and Closed methods.

Any and all corrections shall be announced publicly im mediately in the presence of the judge or judges involved and the referee. The referee shall support the correction of the judge. This decision cannot be over-ruled by any authority. It shall be the responsibility of the chief scorer and referee of the event to see that corrections are announced publicly. Judges' score sheets are often turned over to the referee before reaching the scoring table and the chief scorer. The chief scorer will file these sheets as part of the vital statistics of the meet. Judges' score sheets are available only to the particular judge, referee of the event and chief scorer. The chief scorer shall see that under NO circumstances shall a judge's score sheet ever leave the scoring table for any reason whatever. No other person is authorized to handle or examine these score sheets.

No judge shall leave the immediate vicinity of the scoring table until the referee and chief scorer shall ascertain that all scores in elimination events, and scores, sums, and ordinals in semi-final and final events, are correlated and correct. Only then may the referee dismiss the judges. Judges' elimination sheets must be added by referee and sums checked with tabulators to insure the proper scores have been called. No one shall give out any information

on the score sheets of any event before the tabulation is approved as official by the chief scorer, announcement of results made and score sheet posted.

After all judges' individual scores have been announced publicly by the OPEN or SEMI-OPEN method or announced to the tabulators by the CLOSED method, the next step for the tabulator is the assigning of SUMS to each contestant for all judges.

SUM is the number obtained by adding the individual score(s) of a judge of each contestant in the event. After SUMS have been assigned for an event it is COMPULSORY for ALL tabulators to check their SUMS with each other for correctness BEFORE any tabulator begins the next step

Due to the increasing expansion of competitive roller skating, many meets are scheduled rather tightly. Tabulators at all championship meets must be able to add two, three and four scores RAPIDLY and ACCURATELY. Since these scores have only two digits, tabulators should adopt some method of mental addition to increase their speed and maintain accuracy. No mechanical equipment is allowed.

All scores should be recorded with a BLACK color lead pencil or ink.

The line PLACE is for recording a contestant's final placement in the event. The PLACE should be recorded in RED lead or ink.

GENERAL PREPARATION

The work of scoring, tabulating, and processing of statistics is one of the most important and exacting phases of competitive skating.

Organizers of any sanctioned championship must prepare well in advance for the important job of scoring. Too often, the personnel for the scoring table has been left to chance; and at the last moment casual bystanders have been asked to help. Seldom are such people trained or experienced, and often are only grudgingly willing to assume the tedious and at time delicate work of scoring. With the view to correcting this situation:

CIPA requires the use of trained, experienced and competent scorers to record and process the statistics of all competition.

The Scoring Committee has prepared an examination for a Scoring Commission. Details will be found in another section of this book.

PREPARATION OF SCORE SHEETS

Official CIPA Scoring Sheets must be used to record the statistics of all championship meets. These forms are mailed to all official championships from the CIPA office.

The following must be entered on the front of the CIPA SCORE SHEET.

- NAME of MEET and YEAR
- Club Name
- City and State, Country
- Dates
- Event Skated (name of division)
- Judges' Numbers and Names in space provided, to be listed in ascending numerical order, left to right or top to bottom
- Referee's Name (for the event)
- Federation

For all Artistic events, a marked program or typed list (plain paper may be used) is required with the following information: Competitor's Number, Name, Partner's Name, Club, Rink, City and State, Country. Rink ID Numbers may be used with separate list of Clubs, Rink, City, State and/or Country.

On the CIPA Individual and Summary of Score Sheet or Master Score Sheet the competitor's names and federation are to be entered in the spaces provided AFTER order of skating has been announced.

Referee and assistant referee sheets, announcer's sheet, semi-finalist's sheet, finalist's sheet and final placement's sheet should be prepared at the same time as the score sheets.

Most of the above information can be entered before the start of the meet, with the balance to be entered before the start of the event. On copies of scoring forms to be sent to the CIPA Headquarters, it is required black ink be used to record the individual judge's scores; and to be used to record the SUM of judges' scores; a red color lead to record PLACEMENT, and a black lead pencil to record PLACEMENT RULES.

The recording of all scores must be clear and legible, and each TABULATOR must sign his or her name on the face of the sheet as tabulator for the form he or she has completed. ONE completed copy of the Official Scoring Form for each event MUST be posted on the premises where the meet is conducted and in a place available to all who wish to refer to them.

Immediately following the conclusion of competitions which have been sanctioned under Confederation rules, the following data of said meet must be filed with the CIPA Headquarters.

(a) One copy of each scoring form, completed and signed.
(b) One copy of each protest form as filed with record of the decision of the Referee on reverse side and signed by Referee and Chief Scorer.
(c) One typed copy, listing all judges and all officials with all their assignments.
(d) Two copies of the official program of said meet with corrections (if any) and with placements marked.

STEP BY STEP

method of calculating an Artistic Roller Skating Championship by the CIPA method.

STEP 1

The calculators record all the scores (as they are displayed by the judges) on the Individual Competitors Score Sheets. See Example B-1 page 18 Skater "G" for Figures-Singles-Pairs. Example B-2 page 19 Skater "V" for Dance.

STEP 2

The individual scores are totaled for each judge and these totals are called SUMS. See Examples B-1 and B-2 page 18, lines 5-8-11; and page 19, lines 3-6-10.

STEP 3

Factoring (Coefficient) as outlined here is as currently used by CIPA based upon present rules and regulations and subject to change in the future.

"A" DANCE: There is no factoring for any part of Dance (Compulsory, O.D. or Free).

"B" FIGURES: There is no factoring for the Figures <u>ONLY</u> portion of the CIPA competition.

"C" PAIRS or SINGLES: The CIPA regulations stipulate the Long Program must be 75% of the total sum of the Long and Short Program combined. Therefore the Long Program sum must be multiplied by 3 before adding to the Short Program sum. See Example B-1, page 18, line 12, Skater "G".

"D" COMBINED FIGURES and SINGLES:

(a) Figures and Free Skating have the same value in a combined event, each worth 50% of the total combined score.
(b) In Free Skating the Short Program is worth 25% of the total of the Short and Long Programs.
(c) The Long Program scores are Multiplied by 3 to make them worth three times as much as the Short Program. See page 18 line 12.
(d) The maximum scores for four Figures is 40/ (4 x 10 = 40).
(e) The maximum scores for Free Skating is 80. (20 for the Short Program and 60 for the Long Program).
(f) The Figure scores must be multiplied by 2 to equal the value of the Free Skating scores. See page 18 line 14.
(g) Using a new individual score sheet, enter the Figure scores and the Coefficient 2. Multiply by 2 and enter the amount under the appropriate judge. See Example B-1, page 18. Combination Figures and Singles event, Skater "G" , line 14.

Factoring tables for multiplication by 2, and multiplication by 3 may be found in the appendix of this book.

STEP 4

The Sums and Factored Sums of all the judges for each competitor are added together to obtain the "Point Total" and are recorded on the Individual Competitors score sheets. See Example B-1 Combination, Figures and Singles events for Skater "G", page 18 lines 5-8-13-15 right side; also pages 19 to 23, Examples B-2 to B-6 for Dance.

It is <u>compulsory</u> that all tabulators check their Sums and Point Totals with each other for correctness BEFORE any tabulator begins the next step of transferring the Sums and totals to the "Summary of Scores" table.

STEP 5

The Individual judges Sums and Point Totals on the Individual Competitors Score Sheet are transferred to a Summary of Scores sheet. See Example B-1, page 18 of skater "G" and B-2 to B-6, pages 19 to 23, skaters V-W-X-Y-Z as the Sums and Point Totals are transferred to Examples C-1 to C-6, pages 24-29.

FROM THIS POINT ON THE METHOD OF SCORING MAY VARY SLIGHTLY DEPENDING UPON THE TYPE OF EVENT TO BE CALCULATED.

STEP 6 <u>RULE 2:</u> SUMMARY OF SCORES

The sum awarded to each competitor by each judge is compared to all the other competitors Sums individually. The individual

judges Sum awarded to competitor "A" is compared with the Sum of competitor "B" of that judge. If "A's" sum is higher than "B's" sum then "A" obtains a Victory over "B", but if "B's" sum is higher than "A's" sum then the Victory belongs to "B." There is also a comparison made in this manner with each judge and each competitor C-DE-F-etc. with competitor "A."

After competitor "A" has been compared with all the rest of the competitors as outlined above, move down to competitor "B" and follow the same procedure.

STEP 6 RULE 3: TIES

(Same Sum) by an individual judge are handled in the follow manner:

"A" DANCE (Compulsory with O.D.)
When two competitors have the same SUM by an individual judge, the team with the higher Artistic Impression "B" mark in the O.D. will receive the Victory by that judge. If equality remains each will receive 1/2 win by that judge. See page 28, Example C-5 Judge #1, Contestants "V," "W" and "Z" who all have the same sum 35.7. When comparing the O.D. "B" Artistic Impression scores, "V" 8.7, "W" 8.8, "Z" 8.7, "W" will have a full Win over "V" and "Z". When comparing "V" and "Z", each will receive 1/2 WIN by Judge #1.

"B" DANCE (Compulsory with O.D. and Free Dance)
If there is a Tie (SAME SUM) by an individual judge on the "Summary of Scores" when assigning Victories, apply the following rules in the order listed 1-2-3 to break the tie by that individual judge and assign a WIN.

1. When an individual judge's card shows an equal number of points for two or more dance teams, the higher "B" mark for Artistic Impression in the FREE DANCE shall determine who receives the Win by that judge. See Example C-6, page 29, contestants "X" 8.7 over contestant "Y" 8.6 by Judge #2--each having a sum of 51.8; therefore, "X" obtains a Win.
2. If equality still remains, the higher "B" mark for Artistic Impression in the O.D. shall decide who will receive the Win by that Judge. See Example C-6, page 29, contestants "V" and "Z" by Judge #3 each with a SUM of 53.3 and a Free Dance Artistic Impression "B" mark of 9.0, but the O.D. Artistic Impression "B" marks are "V" 8.7 and "Z" 8.6; therefore, "V" obtains a Win by Judge #3.
3. If equality still remains, a tie shall be awarded and each contestant team shall receive a 1/2 win by that judge. See page 29, Example C-6, Judge #1, contestants "V" and "Z" each with the following: Sum 53.8, Free Dance Artistic Impression "B" mark 9.0, O.D. Artistic Impression "B" mark of 8.7; therefore, each received 1/2 win by judge #1.

"C" 1. FIGURES ONLY
2. COMBINATION of FIGURES AND SINGLES
When two competitors have the same SUM by an individual judge each contestant receives a 1/2 WIN by that judge. Example C-1 FIGURES - note that skaters "A" and "C", judge 4, each has a sum of 26.2 therefore each receives a 1/2 WIN.

"D" SINGLES or PAIRS (Short Program)
The contestant with the higher Artistic Impression "B" mark in the Short Program will receive the Victory by that judge. See page 25, Example C-2 Singles Short Program, skater "A" has 8.2 and skater "B" has 8.1 by judge 2. Therefore, skater "A" receives the WIN by the #2 judge. If the Artistic Impression mark is the same by an individual judge the tied contestants will each receive a 1/2 WIN by that individual judge. See Example C-2 Skaters "I'" and "I" each has a "B" score of 6.4 by judge #2.

"E" SINGLES or PAIRS (Short and Long programs combined)
If there is a tie (Same Sum) by an individual judge on the "Summary of Scoring": when assigning Victories, apply the following rules in the order listed 1-2-3 to break the tie by that individual judge and assign a WIN.

1. If an individual judges card shows an equal number of points for two or more teams in pairs or mens or ladies singles event, the higher marks for Artistic Impression in the Long program shall determine who receives the WIN by that judge. See Example C-3 Combination Short and Long Programs, page 26, Contestant "B" 9.1 over contestant "C" 8.8 by judge #2. Each having 72.4 Sum, therefore "B" obtains the WIN.
2. If equality still remains - the higher "B" marks for Artistic Impression in the Short program shall decide who will receive the WIN by that judge. See Example C-3 Short and Long program combined, page 26, contestant "F" and "I". With same "B " scores in Short and Long programs from all the judges.
3. If equality remains, a tie shall be awarded and each shall receive a 1/2 WIN by that judge, See Example C-3 Combined Short and Long Programs contestants "F" and "I" on page 26 who have same "B" scores for Short and Long programs.

Throughout Examples C-1 to C-6 this comparison is made with all the judges, and the Victories and 1/2 Victories are recorded on the TABLE OF VICTORIES.

See Example C-1, page 24 for a comparison of contestants "A" and "C" on the Summary of Scores and follow the comparison as outlined below:

Judge 1 gave "A" a Victory (A 28.8--C 26.0)
Judge 2 gave "A" a Victory (A 26.2--C 24.6)
Judge 3 gave "C" a Victory (C 27.0--A 26.2)
Judge 4 gave "A" a 1/2 Victory and "C" a 1/2 Victory (A 26.2--C 26.2)
Judge 5 gave "A" a Victory (A 29.4--C 28.8)
Judge 6 gave "A" a Victory (A 28.2--C 27.0)
Judge 7 gave "C" a Victory (C 27.4--A 25.4)

The table of VICTORIES reflects "C" receiving 2 1/2 Victories and "A" receiving 4 1/2 Victories. See Example C-1 contestants "A" and "C" Table of Victories page 24.

Once all the Sums have been compared and the Victories assigned to all the participating contestants on the Table of Victories we are ready to proceed to the next step in our scoring procedure.

STEP 7 RULE 4

If a majority number of judges award Victories and shared Victories to a competitor, this competitor is said to have a "Majority of Victories". As an example, 2 out of a possible 3, 3 of 5, 4 of 7, etc. or better. This means that more judges favored this one contestant over another by the margin of Victories. These Majority Victories are counted and the number of Majority Victories are recorded under the column "Majority Victories" on the right side of the scoring sheet and for all contestants. See Examples C-1 through C-6, pages 24 - 29.

If an equal number of judges award Victories and shared Victories to two or more competitors they are said to have an equal decision or in the case of two competitors each have 1/2 of the Majority Victories. Example: each has 2 1/2 out of a possible 5 or 3 1/2 out of 7, etc., then this contestant will receive a 1/2 Victory under the column "Majority Victories" when counting the number of "Majority Victories". See Example C-2 page 25, contestants "F" and "I" each with 3 1/2.

STEP 8 RULE 5

The competitor with the greatest number of "Majority and 1/2 Majority Victories is given the highest open place (H.O.P.) which begins with the traditional 1st, place. The remaining competitors are reviewed for the next highest number of Majority and 1/2 Majority Victories and the one with this next highest is given the 2nd place. This is done with all the remaining contestants until all receive a place.

TIES: If there is a tie by two or more contestants in the column "Majority Victories" the following rules must be applied, in the order listed, to award the place in question. Continue through the rules until all the involved contestants are placed then return to Step 8, Rule 5 and proceed from there. Disregard competitors with more or fewer Majority Victories and consider the judges decision for the tied competitors only.

When there are more than two contestants tied and during the tie breaking process one or more contestants have a lesser amount than the remaining tied contestants, the ones with the lesser amount do not continue in contention for the place in question. For Example in Step 10 A, Rule 7-B contestant "A" has 54.8 points, "D" has 54.8 points and "E" has 54.2 points -continue on to Step 10 B, Rule 7-B with contestants "A" and "D" only. See C-3 page 26 Contestants "A" - "D" - "E" - the "B" scores of the Long Program.

STEP 9

RULE 6-A 3 or More Tied + **RULE 6-B** 2 Tied

Considering the judges Victories for the tied competitors only (Separate Majority Victories) circle or otherwise identify these Victories between the involved contestants. Add these identified Victories across and list the total under a column headed (Separate Majority Victories). The contestant with the greatest Separate Majority Victories will received the place in question (H.O.P). See page 25, Example C-2 contestants "F" and "I" each with 3 1/2.

If Step 9, Rules 6-A or 6-B does not resolve the tie, proceed to one of the following:

1. DANCE, Compulsory, O.D. and Free- or Combined Short and Long Program Singles or Pairs proceed to Step 10 A, Rule 7-B.
2. Singles or Pairs short program -- Compulsory Dance with O.D. Dance (not including Free Dance). proceed to Step 10 B, Rule 7-B
3. Figures--or Combination of Figures and Singles proceed to Step 10 C, Rule 7-C.

STEP 10 A RULE 7-B

1. **Dance (Compulsory, O.D. and Free)**
   Add all the Artistic Impression "B" marks in the Free Dance (not O.D.) from all the judges for each of the tied contestants. Place the sums of these "B" marks in Section A of the column TOTAL "B" scores. The contestant with the highest sum of these marks shall receive the place in question (H.O.P.). See Example D-4, page 31 and C-6, page 29, contestants "V" and "Z" each with 62.7.
   If step 10 A, Rule 7-B does not resolve the tie, proceed to Step 10 B, Rule 7-B.
2. **SINGLES or PAIRS (Short and Long programs combined).**
   Add all the Individual Artistic Impression "B" marks in the LONG (not Short) Program from all the judges for each tied contestant. Place the sums of these "B" marks in Section A of the column TOTAL "B" SCORES. The contestant with the highest sum of these marks shall receive the place in question (H.O.P.). See Example D-2, page 30; and C-3, page 26, contestants "F" and "I" each with 45.8; also "A" 54.8, "D" 54.8 and "E" 54.2.
   If step 10 A, Rule 7-B does not resolve the tie, proceed to Step 10 B, Rule 7-B.

STEP 10 B Rule 7-B

1. DANCE (Compulsory and O.D.) or for (Compulsory, O.D. and Free Dance after the application of Step 10A, Rule 7-B).
   Add all the Artistic Impression "B" marks in the O.D. Dance from all the judges for each of the tied contestants. Place the sums of these "B" marks in Section B of the column TOTAL "B" SCORES. The contestant with the highest sum of these marks shall receive the place in question (H.O.P.). See Examples D-3 and D-4, page 31; also C-5 and C-6, pages 28 and 29, contestants "V" 60.2 and "Z" 60.2.
   If step 10 B, Rule 7-B does not resolve the tie, proceed to Step 10 C, Rule 7-C.
2. SINGLES or PAIRS--for the Short Program or for the Short and Long Programs combined after the application of Step 10A, Rule 7-B.
   Add all the Artistic Impression "B" marks in the Short (not Long) Program for all the judges for each tied contestant. Place the sums of these "B " marks in Section B of the column TOTAL "B" SCORES. The contestant with the highest sum of these marks shall receive the place in question (H.O.P.). See Example D-1, page 30 and C-2, page 25, contestants "F" and "I" each with 40.2.
   If Step 10 B, Rule 7-B does not resolve the tie, proceed to Step 10 C, Rule 7-C.

STEP 10 C Rule 7-C

Applicable in the following situations

1. DANCE Compulsory with O.D. or Compulsory, O.D. with Free Dance after the application of Step 10B, Rule 7-B.
2. SINGLES or PAIRS Short Program or Combined Short and Long Programs after the application of Step 10B, Rule 7-B.
3. FIGURES after the application of Step 9, Rule 6-A or Rule 6-B.
4. COMBINATION of FIGURES and SINGLES after the application of Step 9, Rule 6-A or Rule 6-B.

Total all the Victories in favor of each tied contestant across the line and place this sum in a column TOTAL VICTORIES. The contestant with the highest TOTAL VICTORIES will receive the place in question (H.O.P.). See the following Examples:

1. DANCE C-5, page 28, contestants "V" 20 1/2 and "Z" 20 1/2.
2. SINGLES or PAIRS C-3, page 26, contestants "A" 21 and "D" 21, also "F" and "I" each with 3 1/2.
3. FIGURES C-1, page 24, contestants "B" 51 1/2 and "G" 511/2.
4. COMBINATION FIGURES and SINGLES C-4, page 27, contestants "C" 31 1/2 and "D" 33 1/2.

If Step 10 C, Rule 7-C does not resolve the tie proceed to Step 11, Rule 7-A for ALL events.

STEP 11 Rule 7-A

For ALL events after application of prior applicable rules, add the sums of ALL the judges of each of the tied contestants and record the sum in a column headed TOTAL SUMS. The contestant with the highest TOTAL SUM will receive the place in question (H.O.P.). See the following examples.

1. DANCE C-5, page 28, contestants "V" 245.6 and "Z" 245.7.
2. SINGLES or PAIRS C-2, page 25, contestants "F" 84.6 and "1" 84.6.
3. FIGURES C-1, page 24, contestants "B" 238.4 and "G" 238.4.
4. COMBINATION FIGURES and SINGLES. No example.

If Step 11, Rule 7-A does not resolve the tie proceed to Step 12, Rule 8.

STEP 12 Rule 8

If equality remains after applying Steps 8 to 11, Rules 5 through 7 the competitors involved in a tie shall share equally the place in question (H.O.P.).
See Example C-2, page 25 and C-3, page 26 Contestants "F" and "I" in a column headed Place. Each has received 8th Place, also C-1, page 24 Contestants "B" and "G" each with 1st place.
It must be remembered, however, in assigning the same place to two or more of the contestants, that the placements have been utilized in quantity equal to the number of contestants involved.
In other words, a three way tie for 12th place uses up 12th, 13th, and 14th place even though all involved contestants have received a 12th place. Therefore, in this case the next place assigned would be 15th place. After the application of Rule 8, in a tie for 1st - 2nd - 3rd place, each of the tied contestants will receive the same award. There is no tie breaking such as a reskate.

CAUTION TO TABULATORS:
In ties of this nature in placing, mistakes may be made in assigning a place for the next contestant after ties.

Special Regulations used at the World Games

Within the World Games Artistic Figure Roller Skating will take part in 4 Competitions: Individual Ladies and Mens Free Skating, Pairs Free Skating and Dance Skating.

Individual Ladies and Mens Free-Skating

The factor for the short program is 1.
The factor for the long program is 3.
Tie-breaking regulations apply as it should be in a regular free skating competition.

Pairs Free Skating

The factor for the short program is 1.
The factor for the long program is 3.
Tie-breaking regulations apply as it should be in a regular pairs skating competition.

Dance Skating

There are no compulsory dances at the World Games. The couples skates an Original Dance and a Free Dance.

The factor for the original dance is 1.
The factor for the free dance is 3.

Original Dance

Individual judges ties will be solved by using the higher artistic impression mark of the Original Dance.

If there is a tie in the column of the majority victories the tie breaking rules of the regular dance result for compulsory dance including the original dance should be applied.

Free Dance

Individual judges ties will be solved by using the higher artistic impression mark of the Free Dance. If the artistic impression mark of the Free Dance is equal, then use the artistic impression mark of the Original Dance. If the artistic impression marks of the Original Dance of the tied contestants is equal, each one receives a ½ win.

If there is a tie in the column of the majority victories the tie breaking rules of the regular final dance results should be applied.

Example A-1

Record: 19 12/18/93

LNG FIGURES FREESKATING AND COMBINED Individual Score Sheet

SK# 001 Name: A

EV# 909	J1	J2	J3	J4	J5	J6	J7		
1: Figure #1	7.2	6.6	6.5	6.5	7.5	7.1	6.5		
2: Figure #2	7.2	6.5	6.5	6.7	7.5	7.0	6.3		
3: Figure #3	7.2	6.4	6.6	6.5	7.2	7.1	6.5		
4: Figure #4	7.2	6.7	6.6	6.5	7.2	7.0	6.1		
5: Fig Sums	28.8	26.2	26.2	26.2	29.4	28.2	25.4	Fig Total	190.4
		Short Free Skating Program							
6: Short A	7.4	9.0	7.0	8.4	6.4	7.0	7.0		
7: Short B	7.2	8.2	6.4	8.0	6.0	6.6	6.3	Tot B Scrs	48.7
8: Short Sum	14.6	17.2	13.4	16.4	12.4	13.6	13.3	Tot Shrt Sum	100.9
		Long Free Skating Programm							
9: Long A	9.0	8.4	8.0	8.6	7.8	8.2	7.8		
10: Long B	8.6	7.8	7.4	8.2	7.6	7.8	7.4	Tot B Scrs	54.8
11: Long Sums	17.6	16.2	15.4	16.8	15.4	16.0	15.2		
12: Line 11 x 3	52.8	48.6	46.2	50.4	46.2	48.0	45.6		
13: Line 8+12	67.4	65.8	59.6	66.8	58.6	61.6	58.9	Tot Free Sum	438.7
		Combined Figures and Free Skating							
14: Line 5 x 2	57.6	52.4	52.4	52.4	58.8	56.4	50.8		
15: Line 13 + 14	125.0	118.2	112.0	119.2	117.4	118.0	109.7	Tot Sum Cmb	819.5

Record: 20 12/18/93

LNG FIGURES FREESKATING AND COMBINED Individual Score Sheet

SK# 002 Name: B

EV# 909	J1	J2	J3	J4	J5	J6	J7		
1: Figure #1	8.5	8.0	8.7	9.6	8.4	8.5	8.2		
2: Figure #2	8.5	8.1	8.7	9.6	8.3	8.5	8.2		
3: Figure #3	8.9	8.0	8.4	8.7	8.5	8.7	8.2		
4: Figure #4	8.9	8.1	8.4	8.7	8.2	8.7	8.2		
5: Fig Sums	34.8	32.2	34.2	36.6	33.4	34.4	32.8	Fig Total	238.4
		Short Free Skating Program							
6: Short A	9.4	9.1	9.0	9.0	9.0	9.4	8.4		
7: Short B	9.4	8.1	8.4	9.0	8.2	9.1	8.0	Tot B Scrs	60.2
8: Short Sum	18.8	17.2	17.4	18.0	17.2	18.5	16.4	Tot Shrt Sum	123.5
		Long Free Skating Programm							
9: Long A	9.8	9.3	9.3	9.8	9.4	9.4	9.0		
10: Long B	9.2	9.1	9.1	9.4	9.2	9.2	8.8	Tot B Scrs	64.0
11: Long Sums	19.0	18.4	18.4	19.2	18.6	18.6	17.8		
12: Line 11 x 3	57.0	55.2	55.2	57.6	55.8	55.8	53.4		
13: Line 8+12	75.8	72.4	72.6	75.6	73.0	74.3	69.8	Tot Free Sum	513.5
		Combined Figures and Free Skating							
14: Line 5 x 2	69.6	64.4	68.4	73.2	66.8	68.8	65.6		
15: Line 13 + 14	145.4	136.8	141.0	148.8	139.8	143.1	135.4	Tot Sum Cmb	990.3

Record: 21 12/18/93

LNG FIGURES FREESKATING AND COMBINED Individual Score Sheet

SK# 003 Name: C

EV# 909	J1	J2	J3	J4	J5	J6	J7		
1: Figure #1	6.5	6.2	7.0	6.5	7.2	6.9	6.9		
2: Figure #2	6.5	6.2	7.0	6.7	7.2	6.9	6.9		
3: Figure #3	6.5	6.2	6.5	6.5	7.2	6.6	6.8		
4: Figure #4	6.5	6.0	6.5	6.5	7.2	6.6	6.8		
5: Fig Sums	26.0	24.6	27.0	26.2	28.8	27.0	27.4	Fig Total	187.0
		Short Free Skating Program							
6: Short A	9.1	9.1	9.1	8.7	8.5	8.1	8.7		
7: Short B	9.1	8.7	9.1	8.7	8.5	8.1	8.5	Tot B Scrs	60.7
8: Short Sum	18.2	17.8	18.2	17.4	17.0	16.2	17.2	Tot Shrt Sum	122.0
		Long Free Skating Programm							
9: Long A	9.6	9.4	9.4	9.8	9.0	9.2	9.4		
10: Long B	9.0	8.8	9.0	9.4	8.6	8.8	8.8	Tot B Scrs	62.4
11: Long Sums	18.6	18.2	18.4	19.2	17.6	18.0	18.2		
12: Line 11 x 3	55.8	54.6	55.2	57.6	52.8	54.0	54.6		
13: Line 8+12	74.0	72.4	73.4	75.0	69.8	70.2	71.8	Tot Free Sum	506.6
		Combined Figures and Free Skating							
14: Line 5 x 2	52.0	49.2	54.0	52.4	57.6	54.0	54.8		
15: Line 13 + 14	126.0	121.6	127.4	127.4	127.4	124.2	126.6	Tot Sum Cmb	880.6

Example A-2

Record: 22 12/18/93

LNG FIGURES FREESKATING AND COMBINED Individual Score Sheet

SK# 004 Name: D

EV# 909	J1	J2	J3	J4	J5	J6	J7		
1: Figure #1	8.2	7.7	8.4	8.3	8.5	8.1	8.1		
2: Figure #2	8.1	7.5	8.3	8.4	8.3	8.4	8.1		
3: Figure #3	8.2	7.6	8.3	8.3	8.4	8.3	8.0		
4: Figure #4	8.1	7.6	8.2	8.4	8.4	8.2	8.0		
5: Fig Sums	32.6	30.4	33.2	33.4	33.6	33.0	32.2	Fig Total	228.4
		Short Free Skating Program							
6: Short A	5.5	7.8	6.5	8.3	6.5	7.3	7.5		
7: Short B	5.4	7.6	6.5	8.3	6.3	7.1	7.5	Tot B Scrs	48.7
8: Short Sum	10.9	15.4	13.0	16.6	12.8	14.4	15.0	Tot Shrt Sum	98.1
		Long Free Skating Programm							
9: Long A	8.4	7.0	8.8	8.8	8.0	7.4	8.0		
10: Long B	8.2	7.4	8.0	8.6	7.8	7.0	7.8	Tot B Scrs	54.8
11: Long Sums	16.6	14.4	16.8	17.4	15.8	14.4	15.8		
12: Line 11 x 3	49.8	43.2	50.4	52.2	47.4	43.2	47.4		
13: Line 8+12	60.7	58.6	63.4	68.8	60.2	57.6	62.4	Tot Free Sum	431.7
		Combined Figures and Free Skating							
14: Line 5 x 2	65.2	60.8	66.4	66.8	67.2	66.0	64.4		
15: Line 13 + 14	125.9	119.4	129.8	135.6	127.4	123.6	126.8	Tot Sum Cmb	888.5

Record: 23 12/18/93

LNG FIGURES FREESKATING AND COMBINED Individual Score Sheet

SK# 005 Name: E

EV# 909	J1	J2	J3	J4	J5	J6	J7		
1: Figure #1	4.5	4.9	4.0	5.0	4.3	4.1	4.7		
2: Figure #2	4.5	4.9	4.0	5.0	4.3	4.1	4.8		
3: Figure #3	4.5	4.8	3.9	4.9	4.3	4.0	4.6		
4: Figure #4	4.5	4.8	3.9	4.7	4.3	4.0	4.7		
5: Fig Sums	18.0	19.4	15.8	19.6	17.2	16.2	18.8	Fig Total	125.0
		Short Free Skating Program							
6: Short A	6.3	7.2	7.0	7.2	7.7	7.8	7.7		
7: Short B	6.1	7.2	7.0	6.8	7.5	7.6	7.7	Tot B Scrs	49.9
8: Short Sum	12.4	14.4	14.0	14.0	15.2	15.4	15.4	Tot Shrt Sum	100.8
		Long Free Skating Programm							
9: Long A	8.2	8.2	8.0	8.8	8.2	7.6	8.0		
10: Long B	8.0	7.6	7.6	8.2	8.0	7.2	7.6	Tot B Scrs	54.2
11: Long Sums	16.2	15.8	15.6	17.0	16.2	14.8	15.6		
12: Line 11 x 3	48.6	47.4	46.8	51.0	48.6	44.4	46.8		
13: Line 8+12	61.0	61.8	60.8	65.0	63.8	59.8	62.2	Tot Free Sum	434.4
		Combined Figures and Free Skating							
14: Line 5 x 2	36.0	38.8	31.6	39.2	34.4	32.4	37.6		
15: Line 13 + 14	97.0	100.6	92.4	104.2	98.2	92.2	99.8	Tot Sum Cmb	684.4

Record: 24 12/18/93

LNG FIGURES FREESKATING AND COMBINED Individual Score Sheet

SK# 006 Name: F

EV# 909	J1	J2	J3	J4	J5	J6	J7		
1: Figure #1	6.7	5.7	5.9	6.1	5.8	6.0	5.9		
2: Figure #2	6.5	5.3	5.9	6.0	5.9	5.9	6.1		
3: Figure #3	6.6	5.7	5.9	6.1	5.8	6.0	5.9		
4: Figure #4	6.4	5.7	5.9	6.0	5.9	5.9	5.9		
5: Fig Sums	26.2	22.4	23.6	24.2	23.4	23.8	23.8	Fig Total	167.4
		Short Free Skating Program							
6: Short A	5.6	7.0	5.6	7.0	6.0	6.0	7.2		
7: Short B	5.0	6.4	5.0	6.6	5.6	5.2	6.4	Tot B Scrs	40.2
8: Short Sum	10.6	13.4	10.6	13.6	11.6	11.2	13.6	Tot Shrt Sum	84.6
		Long Free Skating Programm							
9: Long A	7.0	6.8	6.8	7.0	7.2	7.0	7.2		
10: Long B	6.6	6.2	6.4	6.6	6.8	6.6	6.6	Tot B Scrs	45.8
11: Long Sums	13.6	13.0	13.2	13.6	14.0	13.6	13.8		
12: Line 11 x 3	40.8	39.0	39.6	40.8	42.0	40.8	41.4		
13: Line 8+12	51.4	52.4	50.2	54.4	53.6	52.0	55.0	Tot Free Sum	369.0
		Combined Figures and Free Skating							
14: Line 5 x 2	52.4	44.8	47.2	48.4	46.8	47.6	47.6		
15: Line 13 + 14	103.8	97.2	97.4	102.8	100.4	99.6	102.6	Tot Sum Cmb	703.8

Example A-3

Record: 25 12/18/93

LNG FIGURES FREESKATING AND COMBINED Individual Score Sheet

SK# 007 Name: G

EV# 909	J1	J2	J3	J4	J5	J6	J7		
1: Figure #1	8.5	8.2	8.7	8.1	8.9	8.4	8.6		
2: Figure #2	8.5	8.0	9.1	8.2	9.1	8.5	8.7		
3: Figure #3	8.6	8.0	8.7	8.3	8.9	8.5	8.6		
4: Figure #4	8.5	8.0	8.7	8.3	8.9	8.4	8.5		
5: Fig Sums	34.1	32.2	35.2	32.9	35.8	33.8	34.4	Fig Total	238.4
		Short Free Skating Program							
6: Short A	9.2	9.4	10.0	9.6	9.4	9.5	8.6		
7: Short B	9.3	9.3	9.9	9.5	9.4	9.4	8.5	Tot B Scrs	65.3
8: Short Sum	18.5	18.7	19.9	19.1	18.8	18.9	17.1	Tot Shrt Sum	131.0
		Long Free Skating Programm							
9: Long A	9.9	9.8	9.7	9.9	9.5	9.7	9.8		
10: Long B	9.8	9.6	9.6	9.5	9.3	9.7	9.7	Tot B Scrs	67.2
11: Long Sums	19.7	19.4	19.3	19.4	18.8	19.4	19.5		
12: Line 11 x 3	59.1	58.2	57.9	58.2	56.4	58.2	58.5		
13: Line 8+12	77.6	76.9	77.8	77.3	75.2	77.1	75.6	Tot Free Sum	537.5
		Combined Figures and Free Skating							
14: Line 5 x 2	68.2	64.4	70.4	65.8	71.6	67.6	68.8		
15: Line 13 + 14	145.8	141.3	148.2	143.1	146.8	144.7	144.4	Tot Sum Cmb	1014.3

Record: 26 12/18/93

LNG FIGURES FREESKATING AND COMBINED Individual Score Sheet

SK# 008 Name: H

EV# 909	J1	J2	J3	J4	J5	J6	J7		
1: Figure #1	7.9	6.6	6.9	7.1	7.5	7.9	7.0		
2: Figure #2	7.7	6.4	6.8	7.3	7.4	7.8	7.1		
3: Figure #3	7.7	6.6	6.7	7.3	7.4	7.8	7.2		
4: Figure #4	7.9	6.6	6.8	7.1	7.5	7.9	7.1		
5: Fig Sums	31.2	26.2	27.2	28.8	29.8	31.4	28.4	Fig Total	203.0
		Short Free Skating Program							
6: Short A	9.3	9.9	9.4	9.6	9.9	9.3	8.2		
7: Short B	9.4	9.6	9.4	9.5	9.9	9.3	8.2	Tot B Scrs	65.3
8: Short Sum	18.7	19.5	18.8	19.1	19.8	18.6	16.4	Tot Shrt Sum	130.9
		Long Free Skating Programm							
9: Long A	9.3	9.5	9.1	9.7	9.3	9.4	9.3		
10: Long B	9.0	9.3	9.0	9.3	9.1	9.2	9.1	Tot B Scrs	64.0
11: Long Sums	18.3	18.8	18.1	19.0	18.4	18.6	18.4		
12: Line 11 x 3	54.9	56.4	54.3	57.0	55.2	55.8	55.2		
13: Line 8+12	73.6	75.9	73.1	76.1	75.0	74.4	71.6	Tot Free Sum	519.7
		Combined Figures and Free Skating							
14: Line 5 x 2	62.4	52.4	54.4	57.6	59.6	62.8	56.8		
15: Line 13 + 14	136.0	128.3	127.5	133.7	134.6	137.2	128.4	Tot Sum Cmb	925.7

Record: 27 12/18/93

LNG FIGURES FREESKATING AND COMBINED Individual Score Sheet

SK# 009 Name: I

EV# 909	J1	J2	J3	J4	J5	J6	J7		
1: Figure #1	7.0	6.1	6.0	6.1	5.7	6.1	6.3		
2: Figure #2	6.9	6.1	6.1	6.0	5.9	6.0	6.4		
3: Figure #3	6.9	6.1	6.1	6.2	5.8	6.2	6.5		
4: Figure #4	6.8	6.1	6.0	5.9	5.8	6.1	6.4		
5: Fig Sums	27.6	24.4	24.2	24.2	23.2	24.4	25.6	Fig Total	173.6
		Short Free Skating Program							
6: Short A	5.6	7.0	5.6	7.0	6.0	6.0	7.2		
7: Short B	5.0	6.4	5.0	6.6	5.6	5.2	6.4	Tot B Scrs	40.2
8: Short Sum	10.6	13.4	10.6	13.6	11.6	11.2	13.6	Tot Shrt Sum	84.6
		Long Free Skating Programm							
9: Long A	7.0	6.8	6.8	7.0	7.2	7.0	7.2		
10: Long B	6.6	6.2	6.4	6.6	6.8	6.6	6.6	Tot B Scrs	45.8
11: Long Sums	13.6	13.0	13.2	13.6	14.0	13.6	13.8		
12: Line 11 x 3	40.8	39.0	39.6	40.8	42.0	40.8	41.4		
13: Line 8+12	51.4	52.4	50.2	54.4	53.6	52.0	55.0	Tot Free Sum	369.0
		Combined Figures and Free Skating							
14: Line 5 x 2	55.2	48.8	48.4	48.4	46.4	48.8	51.2		
15: Line 13 + 14	106.6	101.2	98.6	102.8	100.0	100.8	106.2	Tot Sum Cmb	716.2

FIRS Federation Internationale de Roller Sports

B-1

INDIVIDUAL SCORE SHEET

FIGURES FREESKATING AND COMBINED

SKATERS NAME: „G“

DATE:

SKATING ORDER: 1-3 | 5-7 | 7 | 7

FIGURES | SHORT | LONG

		Judge 1 NZL K. Wilkins		Judge 2 GER S. Seeger-L.		Judge 3 NED G. Groot		Judge 4 ESP Y. Camanes		Judge 5 ARG M. Hock		Judge 6 CAN S. Barnard		Judge 7 USA J. Cawly			
	FIGURES																
1	Figure # 20-B	8.5		8.1		8.8		8.2		8.9		8.5		8.4			
2	Figure # 37-A	8.6		8.0		8.7		8.3		9.0		8.4		8.7			
3	Figure # 39-B	8.5		8.0		8.9		8.2		8.9		8.4		8.7			
4	Figure # 40-A	8.5		8.1		8.8		8.2		9.0		8.5		8.6			
5	FIGURE SUMS		34.1		32.2		35.2		32.9		35.8		33.8		34.4	TOTAL FIGURE SUMS	238.4
	SHORT FREESKATING PROGRAM																
6	SHORT „A“	9.2		9.4		10.0		9.6		9.4		9.5		8.6			
7	SHORT „B“	9.3		9.3		9.9		9.5		9.4		9.4		8.5		TOTAL „B“ SCORES	65.3
8	SHORT SUMS		18.5		18.7		19.9		19.1		18.8		18.9		17.1	TOTAL SHORT SUMS	131.0
	LONG FREESKATING PROGRAM																
9	LONG „A“	9.9		9.8		9.7		9.9		9.5		9.7		9.8			
10	LONG „B“	9.8		9.6		9.6		9.5		9.3		9.7		9.7		TOTAL „B“ SCORES	67.2
11	LONG SUMS	19.7		19.4		19.3		19.4		18.8		19.4		19.5			
12	LONG SUMS X 3		59.1		58.2		57.9		58.2		56.4		58.2		58.5		
13	LINE 8 + 12		77.6		76.9		77.8		77.3		75.2		77.1		75.6	TOTAL FREE SUMS	537.5
	COMBINED FIGURES AND FREESKATING																
14	LINE 5 X 2		68.2		64.4		70.4		65.8		71.6		67.6		68.8		
15	LINE 13 + 14		145.8		141.3		148.2		143.1		146.8		144.7		144.4	TOTAL SUMS COMBINED	1014.3

CALCULATOR WDT/RG

FIRS Federation Internationale de Roller Sports

B-2

INDIVIDUAL SCORE SHEET

DANCE

SKATERS NAME: „V“

DATE:

SKATING ORDER: 1 (COMP. and O.D.) 1 (FREE DANCE)

	DANCES	Judge 1 NZL K. Wilkins		Judge 2 GER S. Seeger-L.		Judge 3 NED G. Groot		Judge 4 ESP Y. Camanes		Judge 5 ARG M. Hock		Judge 6 CAN S. Barnard		Judge 7 USA J. Cawly			
	COMPULSORY AND O.D. DANCE																
1	Quickstep	9.0		8.9		8.9		8.9		9.0		8.9		9.0			
2	Viennese Waltz	8.9		8.9		8.9		8.5		8.9		8.5		8.8			
3																	
4	COMP. SUMS		17.9		17.8		17.8		17.4		17.9		17.4		17.8		
5	O.D. „A“	9.1		8.9		8.7		8.5		8.8		8.7		8.7			
6	O.D. „B“	8.7		8.7		8.7		8.4		8.7		8.5		8.5		TOTAL O.D. „B“ SCORES	60.2
7	O.D. SUMS	17.8		17.6		17.4		16.9		17.5		17.2		17.2			
8	O.D. X 1		17.8		17.6		17.4		16.9		17.5		17.2		17.2		
9	SUM COMP. DANCE AND O.D.		35.7		35.4		35.2		34.3		35.4		34.6		35.0	COMP/O.D. TOTAL SUMS	245.6
	FREE DANCE																
10	FREE DANCE „A“	9.1		9.0		9.1		9.1		8.9		9.1		9.1			
11	FREE DANCE „B“	9.0		8.9		9.0		8.8		8.9		9.1		9.0		TOTAL „B“ SCORES	62.7
12	SUM FREE DANCE	18.1		17.9		18.1		17.9		17.8		18.2		18.1			
13	FREE DANCE X 1		18.1		17.9		18.1		17.9		17.8		18.2		18.1		
	COMPULSORY, O.D. AND FREE DANCE COMBINED																
14	LINE 9 + 13		53.8		53.3		53.3		52.2		53.2		52.8		53.1	TOTAL SUMS	371.7

CALCULATOR WDT/RG

FIRS Federation Internationale de Roller Sports

B-3

INDIVIDUAL SCORE SHEET

DANCE

SKATERS NAME: „W“

DATE:

SKATING ORDER: 2 (COMP. and O.D.) 2 (FREE DANCE)

	DANCES	Judge 1 NZL K. Wilkins		Judge 2 GER S. Seeger-L.		Judge 3 NED G. Groot		Judge 4 ESP Y. Camanes		Judge 5 ARG M. Hock		Judge 6 CAN S. Barnard		Judge 7 USA J. Cawly			
	COMPULSORY AND O.D. DANCE																
1	Quickstep	9.1		8.8		8.9		9.0		8.8		8.7		8.7			
2	Viennese Waltz	8.9		8.7		8.8		8.9		8.5		8.4		8.4			
3																	
4	COMP. SUMS		18.0		17.5		17.7		17.9		17.3		17.1		17.1		
5	O.D. „A“	8.9		8.9		8.8		8.9		8.9		8.5		8.9			
6	O.D. „B“	8.8		8.8		8.3		8.7		8.9		8.4		8.9		TOTAL O.D. „B“ SCORES	60.8
7	O.D. SUMS	17.7		17.7		17.1		17.6		17.8		16.9		17.8			
8	O.D. X 1		17.7		17.7		17.1		17.6		17.8		16.9		17.8		
9	SUM COMP. DANCE AND O.D.		35.7		35.2		34.8		35.5		35.1		34.0		34.9	COMP/O.D. TOTAL SUMS	245.2
	FREE DANCE																
10	FREE DANCE „A“	9.5		9.0		8.9		9.0		9.3		9.1		8.9			
11	FREE DANCE „B“	9.3		8.9		8.9		8.9		9.1		8.9		8.9		TOTAL „B“ SCORES	62.9
12	SUM FREE DANCE	18.8		17.9		17.8		17.9		18.4		18.0		17.8			
13	FREE DANCE X 1		18.8		17.9		17.8		17.9		18.4		18.0		17.8		
	COMPULSORY, O.D. AND FREE DANCE COMBINED																
14	LINE 9 + 13		54.5		53.1		52.6		53.4		53.5		52.0		52.7	TOTAL SUMS	371.8

CALCULATOR WDT/RG

FIRS Federation Internationale de Roller Sports

B-4

INDIVIDUAL SCORE SHEET

DANCE

SKATERS NAME: „X“

DATE:

SKATING ORDER: 3 (COMP. and O.D.) 3 (FREE DANCE)

	DANCES	Judge 1 NZL K. Wilkins		Judge 2 GER S. Seeger-L.		Judge 3 NED G. Groot		Judge 4 ESP Y. Camanes		Judge 5 ARG M. Hock		Judge 6 CAN S. Barnard		Judge 7 USA J. Cawly			
	COMPULSORY AND O.D. DANCE																
1	Quickstep	8.8		8.8		8.9		8.8		8.8		8.7		8.5			
2	Viennese Waltz	8.6		8.7		8.8		8.5		8.7		8.4		8.3			
3																	
4	COMP. SUMS		17.4		17.5		17.7		17.3		17.5		17.1		16.8		
5	O.D. „A“	8.7		8.3		8.7		8.5		8.8		8.7		8.8			
6	O.D. „B“	8.6		8.4		8.5		8.5		8.3		8.5		8.5		TOTAL O.D. „B“ SCORES	59.3
7	O.D. SUMS	17.3		16.7		17.2		17.0		17.1		17.2		17.3			
8	O.D. X 1		17.3		16.7		17.2		17.0		17.1		17.2		17.3		
9	SUM COMP. DANCE AND O.D.		34.7		34.2		34.9		34.3		34.6		34.3		34.1	COMP/O.D. TOTAL SUMS	241.1
	FREE DANCE																
10	FREE DANCE „A“	8.7		8.9		8.8		8.7		8.5		8.6		8.5			
11	FREE DANCE „B“	8.7		8.7		8.5		8.5		8.3		8.5		8.5		TOTAL „B“ SCORES	59.7
12	SUM FREE DANCE	17.4		17.6		17.3		17.2		16.8		17.1		17.0			
13	FREE DANCE X 1		17.4		17.6		17.3		17.2		16.8		17.1		17.0		
	COMPULSORY, O.D. AND FREE DANCE COMBINED																
14	LINE 9 + 13		52.1		51.8		52.2		51.5		51.4		51.4		51.1	TOTAL SUMS	361.5

CALCULATOR WDT/RG

FIRS Federation Internationale de Roller Sports

B-5

INDIVIDUAL SCORE SHEET

DANCE

SKATERS NAME: „Y“

DATE:

SKATING ORDER: COMP. and O.D. 4 | FREE DANCE 4

	DANCES	Judge 1 NZL K. Wilkins		Judge 2 GER S. Seeger-L.		Judge 3 NED G. Groot		Judge 4 ESP Y. Camanes		Judge 5 ARG M. Hock		Judge 6 CAN S. Barnard		Judge 7 USA J. Cawly			
	COMPULSORY AND O.D. DANCE																
1	Quickstep	8.9		8.8		8.8		8.5		8.7		8.7		8.7			
2	Viennese Waltz	8.5		8.5		8.8		8.5		8.8		8.5		8.6			
3																	
4	COMP. SUMS		17.4		17.3		17.6		17.0		17.5		17.2		17.3		
5	O.D. „A“	8.8		8.8		8.9		8.8		8.8		8.5		8.8			
6	O.D. „B“	8.7		8.4		8.4		8.7		8.4		8.5		8.8		TOTAL O.D. „B“ SCORES	59.9
7	O.D. SUMS	17.5		17.2		17.3		17.5		17.2		17.0		17.6			
8	O.D. X 1		17.5		17.2		17.3		17.5		17.2		17.0		17.6		
9	SUM COMP. DANCE AND O.D.		34.9		34.5		34.9		34.5		34.7		34.2		34.9	COMP/O.D. TOTAL SUMS	242.6
	FREE DANCE																
10	FREE DANCE „A“	8.7		8.7		8.8		8.6		8.5		8.6		8.6			
11	FREE DANCE „B“	8.5		8.6		8.5		8.6		8.3		8.5		8.5		TOTAL „B“ SCORES	59.5
12	SUM FREE DANCE	17.2		17.3		17.3		17.2		16.8		17.1		17.1			
13	FREE DANCE X 1		17.2		17.3		17.3		17.2		16.8		17.1		17.1		
	COMPULSORY, O.D. AND FREE DANCE COMBINED																
14	LINE 9 + 13		52.1		51.8		52.2		51.7		51.5		51.3		52.0	TOTAL SUMS	362.6

CALCULATOR WDT/RG

FIRS Federation Internationale de Roller Sports

B-6

INDIVIDUAL SCORE SHEET

DANCE

SKATERS NAME: „Z“

DATE:

SKATING ORDER: 5 (COMP. and O.D.) 5 (FREE DANCE)

	DANCES	Judge 1 NZL K. Wilkins		Judge 2 GER S. Seeger-L.		Judge 3 NED G. Groot		Judge 4 ESP Y. Camanes		Judge 5 ARG M. Hock		Judge 6 CAN S. Barnard		Judge 7 USA J. Cawly			
	COMPULSORY AND O.D. DANCE																
1	Quickstep	9.3		9.1		8.9		8.7		9.2		8.5		9.0			
2	Viennese Waltz	9.0		9.0		8.7		8.7		9.0		8.5		8.7			
3																	
4	COMP. SUMS		18.3		18.1		17.6		17.4		18.2		17.0		17.7		
5	O.D. „A“	8.7		8.7		8.8		8.7		8.9		8.6		8.8			
6	O.D. „B“	8.7		8.5		8.6		8.6		8.7		8.5		8.6		TOTAL O.D. „B“ SCORES	60.2
7	O.D. SUMS	17.4		17.2		17.4		17.3		17.6		17.1		17.4			
8	O.D. X 1		17.4		17.2		17.4		17.3		17.6		17.1		17.4		
9	SUM COMP. DANCE AND O.D.		35.7		35.3		35.0		34.7		35.8		34.1		35.1	COMP/O.D. TOTAL SUMS	245.7
	FREE DANCE																
10	FREE DANCE „A“	9.1		8.7		9.3		9.0		8.9		9.1		9.1			
11	FREE DANCE „B“	9.0		8.7		9.0		9.0		8.9		9.1		9.0		TOTAL „B“ SCORES	62.7
12	SUM FREE DANCE	18.1		17.4		18.3		18.0		17.8		18.2		18.1			
13	FREE DANCE X 1		18.1		17.4		18.3		18.0		17.8		18.2		18.1		
	COMPULSORY, O.D. AND FREE DANCE COMBINED																
14	LINE 9 + 13		53.8		52.7		53.3		52.7		53.6		52.3		53.2	TOTAL SUMS	371.6

CALCULATOR WDT/RG

C-1 COMPULSORY FIGURES

MASTER CHART

TABLE OF VICTORIES

REFEREE:

ASSISTANT REFEREE:

TOTAL SUMS	SUMMARY OF SCORES – JUDGES 1	2	3	4	5	6	7	CONTESTANT		„A“ 1	„B“ 2	„C“ 3	„D“ 4	„E“ 5	„F“ 6	„G“ 7	„H“ 8	„I“ 9	ASSIGNING PLACEMENTS – MAJORITY VICTORIES	TOTAL SEPARATE VICTORIES	TOTAL B SCORES A	TOTAL B SCORES B	TOTAL VICTORIES	TOTAL SUMS	PLACE
190.4	28.8	26.2	26.2	26.2	29.4	28.2	25.4	„A“	1		0	4½	0	7	7	0	½	6	4						5
238.4	34.8	32.2	34.2	36.6	33.4	34.4	32.8	„B“	2	7		7	6	7	7	3½	7	7	7½	3½			51½	238.4	1
187.0	26.0	24.6	27.0	26.2	28.8	27.0	27.4	„C“	3	2½	0		0	7	6	0	0	6	3						6
228.4	32.6	30.4	33.2	33.4	33.6	33.0	32.2	„D“	4	7	1	7		7	7	1	7	7	6						3
125.0	18.0	19.4	15.8	19.6	17.2	16.2	18.8	„E“	5	0	0	0	0		0	0	0	0	0						9
167.4	26.2	22.4	23.6	24.2	23.4	23.8	23.8	„F“	6	0	0	1	0	7		0	0	1½	1						8
238.4	34.1	32.2	35.2	32.9	35.8	33.8	34.4	„G“	7	7	3½	7	6	7	7		7	7	7½	3½			51½	238.4	1
203.0	31.2	26.2	27.2	28.8	29.8	31.4	28.4	„H“	8	6½	0	7	0	7	7	0		7	5						4
173.6	27.6	24.4	24.2	24.2	23.2	24.4	25.6	„I“	9	1	0	1	0	7	5½	0	0		2						7

CHAMPIONSHIPS:

DATE:

CALCULATOR: WDT/RG

C-2

SINGLES (or PAIRS)
SHORT PROGRAM

MASTER CHART

TABLE OF VICTORIES

REFEREE:

ASSISTANT REFEREE:

TOTAL SUMS	SUMMARY OF SCORES – JUDGES 1	2	3	4	5	6	7	CONTESTANT		„A“ 1	„B“ 2	„C“ 3	„D“ 4	„E“ 5	„F“ 6	„G“ 7	„H“ 8	„I“ 9	ASSIGNING PLACEMENTS – MAJORITY VICTORIES	TOTAL SEPARATE VICTORIES	TOTAL B SCORES A	TOTAL B SCORES B	TOTAL VICTORIES	TOTAL SUMS	PLACE
100.9	14.6	8.2 / 17.2	13.4	16.4	12.4	13.6	13.3	„A“	1		1	0	3	3	6	0	0	6	2						7
123.5	18.8	8.1 / 17.2	17.4	18.0	17.2	18.5	8.0 / 16.4	„B“	2	6		4	7	7	7	1	1	7	6						3
122.0	18.2	17.8	18.2	17.4	17.0	16.2	17.2	„C“	3	7	3		7	7	7	1	1	7	5						4
98.1	10.9	15.4	13.0	16.6	12.8	14.4	15.0	„D“	4	4	0	0		2	7	0	0	7	3						6
100.8	12.4	14.4	14.0	14.0	15.2	15.4	15.4	„E“	5	4	0	0	5		7	0	0	7	4						5
84.6	5.0 / 10.6	6.4 / 13.4	5.0 / 10.6	6.6 / 13.6	5.6 / 11.6	5.2 / 11.2	6.4 / 13.6	„F“	6	1	0	0	0	0		0	0	3½	½	3½	40.2		4½	84.6	8
131.0	18.5	18.7	19.9	9.5 / 19.1	18.8	18.9	17.1	„G“	7	7	6	6	7	7	7		3½	7	7½	3½	65.3		50½	131.0	1
130.9	18.7	19.5	18.8	9.5 / 19.1	19.8	18.6	8.2 / 16.4	„H“	8	7	6	6	7	7	7	3½		7	7½	3½	65.3		50½	130.9	2
84.6	5.0 / 10.6	6.4 / 13.4	5.0 / 10.6	6.6 / 13.6	5.6 / 11.6	5.2 / 11.2	6.4 / 13.6	„I“	9	1	0	0	0	0	3½	0	0		½	3½	40.2		4½	84.6	8

CHAMPIONSHIPS:

DATE:

CALCULATOR: WDT/RG

C-3

SINGLES (or PAIRS)
SHORT and LONG PROGRAM COMBINED

MASTER CHART

TABLE OF VICTORIES

REFEREE:

ASSISTANT REFEREE:

TOTAL SUMS	SUMMARY OF SCORES – JUDGES 1 Short	1 Long	2 Short	2 Long	3 Short	3 Long	4 Short	4 Long	5 Short	5 Long	6 Short	6 Long	7 Short	7 Long	COUNTRY ► / CONTESTANT ▼		„A“ 1	„B“ 2	„C“ 3	„D“ 4	„E“ 5	„F“ 6	„G“ 7	„H“ 8	„I“ 9	ASSIGNING PLACEMENTS – MAJORITY VICTORIES	TOTAL SEPARATE VICTORIES	TOTAL B SCORES – LONG PROGRAM A	TOTAL B SCORES – SHORT PROGRAM B	TOTAL VICTORIES	TOTAL SUMS	PLACE
438.7																																
	67.4		65.8		59.6		66.8		58.6		61.6		58.9		„A“	1		0	0	3	4	7	0	0	7	3	7	54.8	48.7	21	438.7	5
513.5				9.1																												
	75.8		72.4		72.6		75.6		73.0		74.3		69.8		„B“	2	7		5	7	7	7	0	1	7	6						3
506.6				8.8																												
	74.0		72.4		73.4		75.0		69.8		70.2		71.8		„C“	3	7	2		7	7	7	0	3	7	5						4
431.7																																
	60.7		58.6		63.4		68.8		60.2		57.6		62.4		„D“	4	4	0	0		3	7	0	0	7	3	7	54.8	48.7	21	431.7	6
434.4																																
	61.0		61.8		60.8		65.0		63.8		59.8		62.2		„E“	5	3	0	0	4		7	0	0	7	3	7	54.2				7
369.0	5.0	6.6	6.4	6.2	5.0	6.4	6.6	6.6	5.6	6.8	5.2	6.6	6.4	6.6																		
	51.4		52.4		50.2		54.4		53.6		52.0		55.0		„F“	6	0	0	0	0	0		0	0	3½	½	3½	45.8	40.2	3½	369.0	8
537.5																																
	77.6		76.9		77.8		77.3		75.2		77.1		75.6		„G“	7	7	7	7	7	7	7		7	7	8						1
519.7																																
	73.6		75.9		73.1		76.1		75.0		74.4		71.6		„H“	8	7	6	4	7	7	7	0		7	7						2
369.0	5.0	6.6	6.4	6.2	5.0	6.4	6.6	6.6	5.6	6.8	5.2	6.6	6.4	6.6																		
	51.4		52.4		50.2		54.4		53.6		52.0		55.0		„I“	9	0	0	0	0	0	3½	0	0		½	3½	45.8	40.2	3½	369.0	8

CHAMPIONSHIPS:

DATE:

CALCULATOR: WDT/RG

C-4 COMBINATION FIGURES and SINGLES (SHORT and LONG PROGRAM)

MASTER CHART

TABLE OF VICTORIES

REFEREE:

ASSISTANT REFEREE:

TOTAL SUMS	SUMMARY OF SCORES – JUDGES 1	2	3	4	5	6	7	CONTESTANT		1 „A“	2 „B“	3 „C“	4 „D“	5 „E“	6 „F“	7 „G“	8 „H“	9 „I“	ASSIGNING PLACEMENTS – MAJORITY VICTORIES	TOTAL SEPARATE VICTORIES	TOTAL B SCORES A	TOTAL B SCORES B	TOTAL VICTORIES	TOTAL SUMS	PLACE
819.5	125.0	118.2	112.0	119.2	117.4	118.0	109.7	„A“	1		0	0	0	7	7	0	0	7	3						6
990.3	145.4	136.8	141.0	148.8	139.8	143.1	135.4	„B“	2	7		7	7	7	7	1	7	7	7						2
880.6	126.0	121.6	127.4	127.4	127.4	124.2	126.6	„C“	3	7	0		3½	7	7	0	0	7	4½	3½			31½		5
888.5	125.9	119.4	129.8	135.6	127.4	123.6	126.8	„D“	4	7	0	3½		7	7	0	2	7	4½	3½			33½		4
684.4	97.0	100.6	92.4	104.2	98.2	92.2	99.8	„E“	5	0	0	0	0		2	0	0	1	0						9
703.8	103.8	97.2	97.4	102.8	100.4	99.6	102.6	„F“	6	0	0	0	0	5		0	0	1½	1						8
1014.3	145.8	141.3	148.2	143.1	146.8	144.7	144.4	„G“	7	7	6	7	7	7	7		7	7	8						1
925.7	136.0	128.3	127.5	133.7	134.6	137.2	128.4	„H“	8	7	0	7	5	7	7	0		7	6						3
716.2	106.6	101.2	98.6	102.8	100.0	100.8	106.2	„I“	9	0	0	0	0	6	5½	0	0		2						7

CHAMPIONSHIPS:

DATE:

CALCULATOR: WDT/RG

C-5 DANCE COMPULSORY and O.D.

MASTER CHART

TABLE OF VICTORIES

REFEREE:

ASSISTANT REFEREE:

TOTAL SUMS	SUMMARY OF SCORES – JUDGES 1	2	3	4	5	6	7	CONTESTANT		1 „V“	2 „W“	3 „X“	4 „Y“	5 „Z“	6	7	8	9	ASSIGNING PLACEMENTS – MAJORITY VICTORIES	TOTAL SEPARATE VICTORIES	TOTAL B SCORES – O.D. DANCE A	TOTAL B SCORES – B	TOTAL VICTORIES	TOTAL SUMS	PLACE
245.6	8.7 35.7	35.4	35.2	8.4 34.3	35.4	34.6	35.0	„V“	1		5	6	6	3½					3½	3½	60.2		20½	245.6	2
245.2	8.8 35.7	35.2	34.8	35.5	35.1	34.0	8.9 34.9	„W“	2	2		5	5	2					2						3
241.1	34.7	34.2	8.5 34.9	8.5 34.3	34.6	34.3	34.1	„X“	3	1	2		2	1					0						5
242.6	34.9	34.5	8.4 34.9	34.5	34.7	34.2	8.8 34.9	„Y“	4	1	2	5		1					1						4
245.7	8.7 35.7	35.3	35.0	34.7	35.8	34.1	35.1	„Z“	5	3½	5	6	6						3½	3½	60.2		20½	245.7	1
									6																
									7																
									8																
									9																

CHAMPIONSHIPS:

DATE:

CALCULATOR: WDT/RG

C-6 DANCE COMPULSORY O.D. and FREE

MASTER CHART

TABLE OF VICTORIES

REFEREE:

ASSISTANT REFEREE:

TOTAL SUMS	SUMMARY OF SCORES – JUDGES 1	2	3	4	5	6	7	COUNTRY ► / CONTESTANT ▼		„V“ 1	„W“ 2	„X“ 3	„Y“ 4	„Z“ 5	6	7	8	9	ASSIGNING PLACEMENTS – MAJORITY VICTORIES	TOTAL SEPARATE VICTORIES	TOTAL B SCORES A	TOTAL B SCORES B	TOTAL VICTORIES	TOTAL SUMS	PLACE
371.7	9.0 8.7 53.8	53.3	9.0 8.7 53.3	52.2	53.2	52.8	53.1	„V“	1		4	7	7	3½					3½	3½	62.7	60.2	21½	371.7	1
371.8	54.5	53.1	52.6	53.4	53.5	52.0	52.7	„W“	2	3		7	7	3					2						3
361.5	8.7 52.1	8.7 51.8	8.5 8.5 52.2	51.5	51.4	51.4	51.1	„X“	3	0	0		4	0					1						4
362.6	8.5 52.1	8.6 51.8	8.5 8.4 52.2	51.7	51.5	51.3	52.0	„Y“	4	0	0	3		0					0						5
371.6	9.0 8.7 53.8	52.7	9.0 8.6 53.3	52.7	53.6	52.3	53.2	„Z“	5	3½	4	7	7						3½	3½	62.7	60.2	21½	371.6	2
									6																
									7																
									8																
									9																

CHAMPIONSHIPS:

DATE:

CALCULATOR: WDT/RG

EXAMPLE D-1

Event: Singles (or Pairs) SHORT PROGRAM
Application of Rule 7-B, Step 10B, Sum of the Artistic Impression (B) scores of the Short Program

H.O.P.	CONTESTANTS		G	H
1	Judge 1	Performance (B) Scores	9.3	9.4
	Judge 2	Performance (B) Scores	9.3	9.6
	Judge 3	Performance (B) Scores	9.9	9.4
	Judge 4	Performance (B) Scores	9.5	9.5
	Judge 5	Performance (B) Scores	9.4	9.9
	Judge 6	Performance (B) Scores	9.4	9.3
	Judge 7	Performance (B) Scores	8.5	8.2
	TOTAL	Performance (B) Scores	65.3	65.3

H.O.P.	CONTESTANTS		F	I
8	Judge 1	Performance (B) Scores	5.0	5.0
	Judge 2	Performance (B) Scores	6.4	6.4
	Judge 3	Performance (B) Scores	5.0	5.0
	Judge 4	Performance (B) Scores	6.6	6.6
	Judge 5	Performance (B) Scores	5.6	5.6
	Judge 6	Performance (B) Scores	5.2	5.2
	Judge 7	Performance (B) Scores	6.4	6.4
	TOTAL	Performance (B) Scores	40.2	40.2

EXAMPLE D-2

Event Singles (or Pairs) SHORT AND LONG **PROGRAMS** - Application of Rule 7-B, Step 10A Sums and 7-B Step 10B, the Artistic Impression (B) scores of the Long and Short Program.

H.O.P.		CONTESTANTS					
5		A		D		E	
		Long	Short	Long	Short	Long	Short
J-1	"B" Scores	8.6	7.2	8.2	5.4	8.0	6.1
J-2	"B" Scores	7.8	8.2	7.4	7.6	7.6	7.2
J-3	"B" Scores	7.4	6.4	8.0	6.5	7.6	7.0
J-4	"B" Scores	8.2	8.0	8.6	8.3	8.2	6.8
J-5	"B" Scores	7.6	6.0	7.8	6.3	8.0	7.5
J-6	"B" Scores	7.8	6.6	7.0	7.1	7.2	7.6
J-7	"B" Scores	7.4	6.3	7.8	7.5	7.6	7.7
TOTAL	"B" Scores	54.8	48.7	54.8	48.7	54.2	49.9

H.O.P.		CONTESTANTS			
8		F		I	
		Long	Short	Long	Short
J-1	"B" Scores	6.6	5.0	6.6	5.0
J-2	"B" Scores	6.2	6.4	6.2	6.4
J-3	"B" Scores	6.4	5.0	6.4	5.0
J-4	"B" Scores	6.6	6.6	6.6	6.6
J-5	"B" Scores	6.8	5.6	6.8	5.6
J-6	"B" Scores	6.6	5.2	6.6	5.2
J-7	"B" Scores	6.6	6.4	6.6	6.4
TOTAL	"B" Scores	45.8	40.2	45.8	40.2

EXAMPLE D-3

WORLD CLASS DANCE COMPULSORY AND O.D.

ARTISTIC IMPRESSION “B” SCORES OF O.D.

Contestant	**1**	**2**	**3**	**4**	**5**
Judge #1 "B" Scores	8.7	8.8	8.6	8.7	8.7
Judge #2 "B" Scores	8.7	8.8	8.4	8.4	8.5
Judge #3 "B" Scores	8.7	8.3	8.5	8.4	8.6
Judge #4 "B" Scores	8.4	8.7	8.5	8.7	8.6
Judge #5 "B" Scores	8.7	8.9	8.3	8.4	8.7
Judge #6 "B" Scores	8.5	8.4	8.5	8.5	8.5
Judge #7 "B" Scores	8.5	8.9	8.5	8.8	8.6
TOTAL "B" Scores of O.D. Dance	60.2	60.8	59.3	59.9	60.2

EXAMPLE D-4

WORLD CLASS DANCE -- COMPULSORY, O.D. AND FREE

ARTISTIC IMPRESSION "B" SCORES OF FREE DANCE

Contestant	**1** **V**	**2** **W**	**3** **X**	**4** **Y**	**5** **Z**
Judge #1 "B" Scores	9.0	9.3	8.7	8.5	9.0
Judge #2 "B" Scores	8.9	8.9	8.7	8.6	8.7
Judge #3 "B" Scores	9.0	8.9	8.5	8.5	9.0
Judge #4 "B" Scores	8.8	8.9	8.5	8.6	9.0
Judge #5 "B" Scores	8.9	9.1	8.3	8.3	8.9
Judge #6 "B" Scores	9.1	8.9	8.5	8.5	9.1
Judge #7 "B" Scores	9.0	8.9	8.5	8.5	9.0
TOTAL "B" Scores of Free Dance	62.7	62.9	59.7	59.5	62.7

SIMPLIFIED GUIDE • "TABLE OF VICTORIES"

1. **COMPULSORY DANCE with O.D.**
   First on the Compulsory Dance and O.D. Dance (NOT WITH FREE DANCE) use the Artistic Impression "B" scores of the O.D. Dance to break the INDIVIDUAL JUDGES TIES for wins or losses.

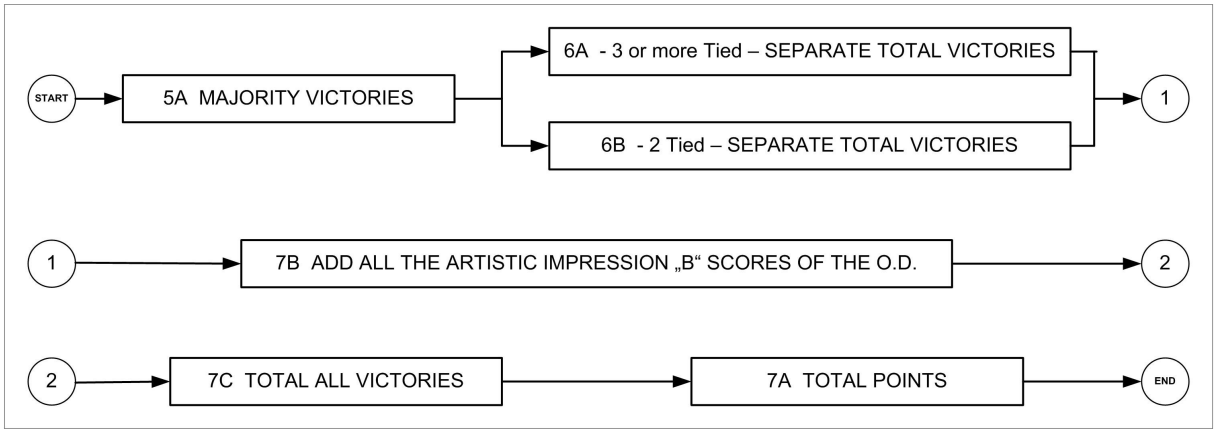

2. **COMPULSORY with O.D. and FREE DANCE**
   First use the Artistic Impression "B" scores of the Free Dance to break the INDIVIDUAL JUDGES TIES for wins or losses.
   Second use the Artistic Impression "B" scores of the O.D. to break the INDIVIDUAL JUDGES TIES for wins or losses. If the Judge is still tied, each will receive 1/2 win.

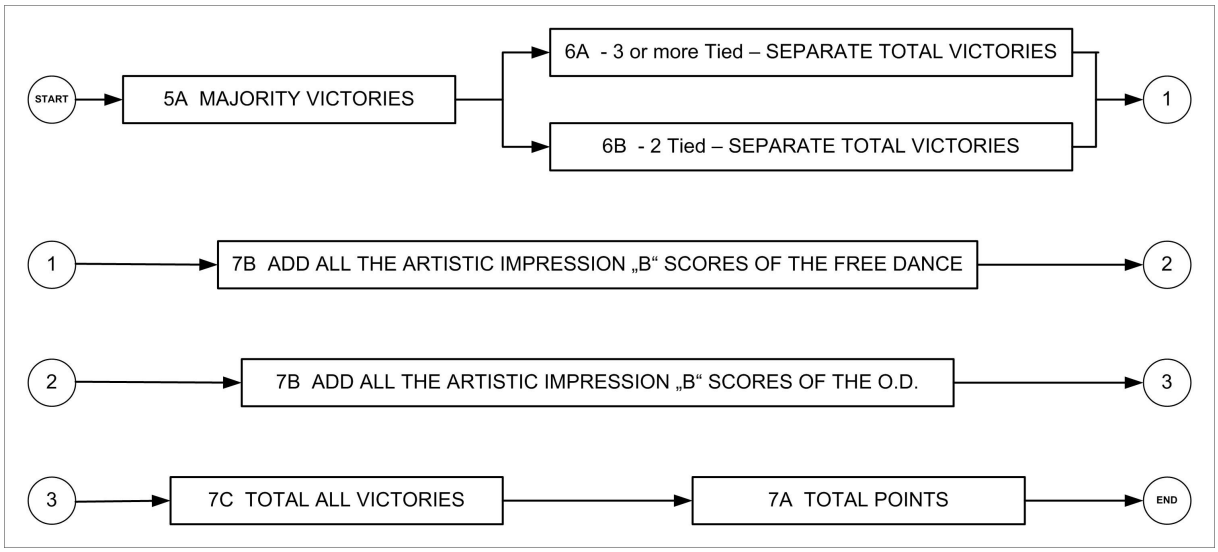

3. **COMPULSORY FIGURES**

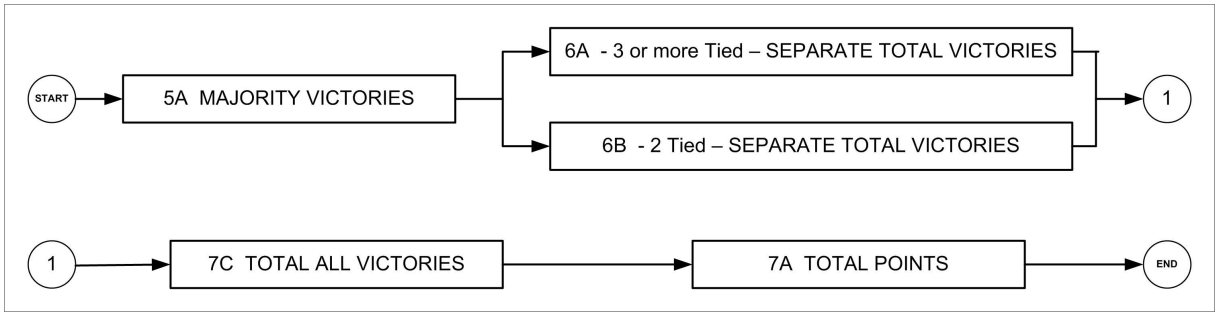

4. **SINGLES or PAIRS SHORT PROGRAM**
First use the Artistic Impression "B" scores to break any INDIVIDUAL JUDGES TIES for wins or losses.

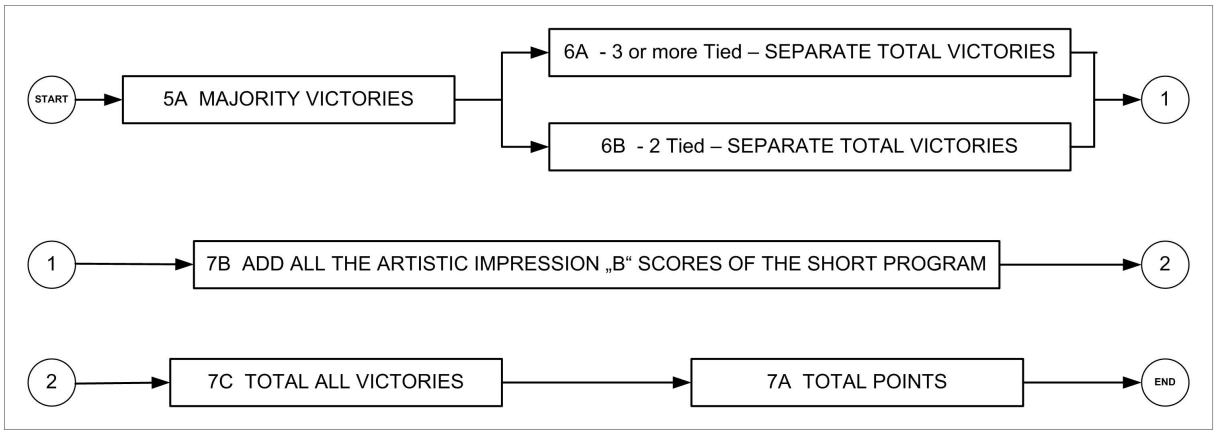

5. **SINGLES or PAIRS LONG and SHORT PROGRAMS (Factor long program by 3)**
First use the Artistic Impression "B" scores in the LONG program to break any INDIVIDUAL JUDGES TIES for wins or losses.
Second use the Artistic Impression "B" scores in the SHORT program to break any INDIVIDUAL JUDGES TIES for wins or losses.

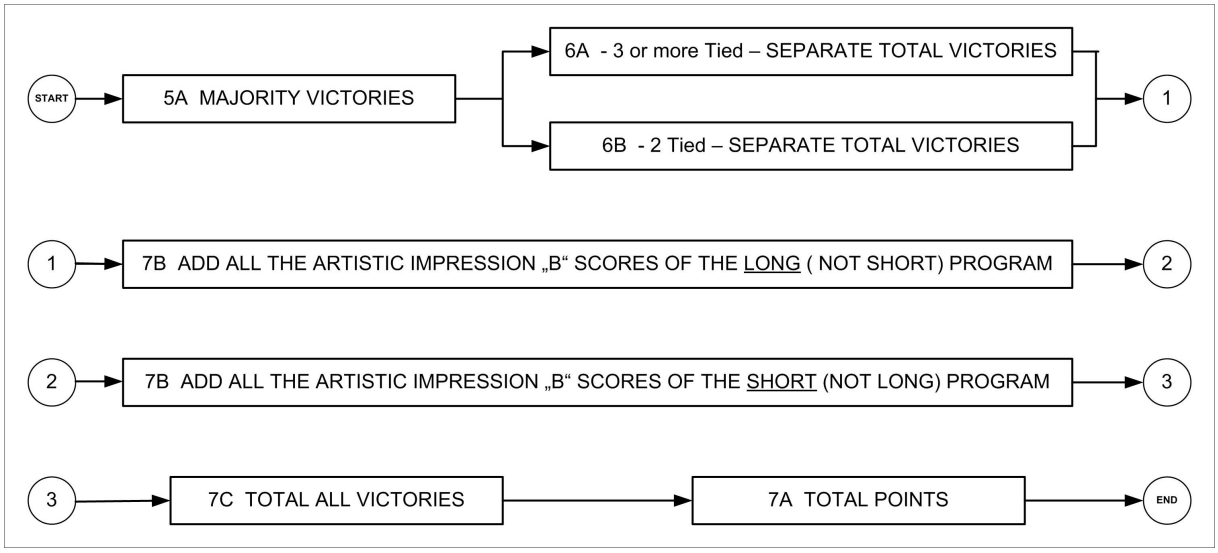

6. COMBINATION FIGURES and SINGLES (Factor figures by 2)

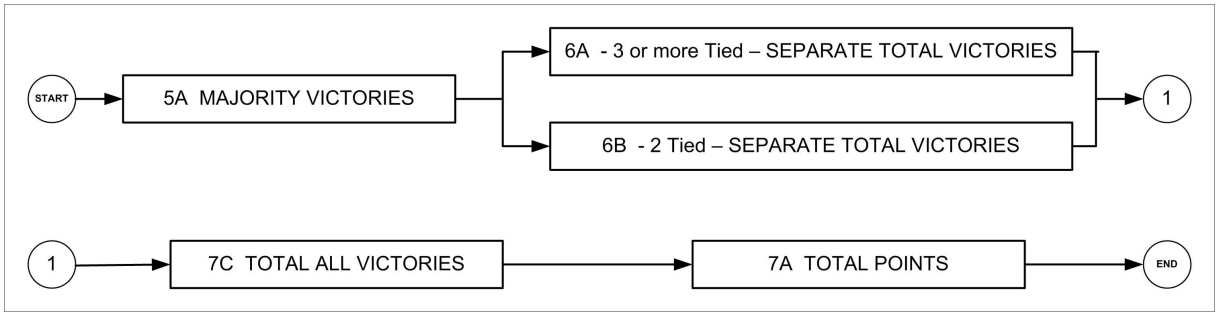

MASTER CHART

TABLE OF VICTORIES

REFEREE: _____

ASSISTANT REFEREE: _____

TOTAL SUMS	SUMMARY OF SCORES / JUDGES 1	2	3	4	5	6	7	COUNTRY ► / ▼ CONTESTANT		1	2	3	4	5	6	7	8	9	ASSIGNING PLACEMENTS / MAJORITY VICTORIES	TOTAL SEPARATE VICTORIES	TOTAL B SCORES A	TOTAL B SCORES B	TOTAL VICTORIES	TOTAL SUMS	PLACE
									1																
									2																
									3																
									4																
									5																
									6																
									7																
									8																
									9																

CHAMPIONSHIPS: _____

DATE: _____

CALCULATOR: _____

MASTER CHART

TABLE OF VICTORIES

REFEREE: _____

ASSISTANT REFEREE: _____

TOTAL SUMS	SUMMARY OF SCORES – JUDGES 1	2	3	4	5	6	7	CONTESTANT (COUNTRY)	1	2	3	4	5	6	7	8	9	10	11	12	13	14	15	ASSIGNING PLACEMENTS	MAJORITY VICTORIES	TOTAL SEPARATE VICTORIES	TOTAL B SCORES A	TOTAL B SCORES B	TOTAL VICTORIES	TOTAL SUMS	PLACE
								1																							
								2																							
								3																							
								4																							
								5																							
								6																							
								7																							
								8																							
								9																							
								10																							
								11																							
								12																							
								13																							
								14																							
								15																							

CHAMPIONSHIPS: _____

DATE: _____

CALCULATOR: _____

INDIVIDUAL SCORE SHEET

FIGURES FREESKATING AND COMBINED

FIRS
Federation Internationale de Roller Sports

SKATERS NAME: _____

DATE: _____

SKATING ORDER: _____ FIGURES _____ SHORT _____ LONG

		Judge 1		Judge 2		Judge 3		Judge 4		Judge 5		Judge 6		Judge 7			
	FIGURES																
1	Figure #																
2	Figure #																
3	Figure #																
4	Figure #																
5	FIGURE SUMS															TOTAL FIGURE SUMS	
	SHORT FREESKATING PROGRAM																
6	SHORT „A“																
7	SHORT „B“															TOTAL „B“ SCORES	
8	SHORT SUMS															TOTAL SHORT SUMS	
	LONG FREESKATING PROGRAM																
9	LONG „A“																
10	LONG „B“															TOTAL „B“ SCORES	
11	LONG SUMS																
12	LONG SUMS X 3																
13	LINE 8 + 12															TOTAL FREE SUMS	
	COMBINED FIGURES AND FREESKATING																
14	LINE 5 X 2																
15	LINE 13 + 14															TOTAL SUMS COMBINED	

CALCULATOR _____

FIRS
Federation Internationale de Roller Sports

INDIVIDUAL SCORE SHEET

DANCE

SKATERS NAME: _____

DATE: _____

SKATING ORDER: _____ COMP. and O.D. _____ FREE DANCE

	COMPULSORY AND O.D. DANCE															
	DANCES	Judge 1		Judge 2		Judge 3		Judge 4		Judge 5		Judge 6		Judge 7		
1																
2																
3																
4	COMP. SUMS															
5	O.D. „A“															
6	O.D. „B“															TOTAL O.D. „B“ SCORES
7	O.D. SUMS															
8	O.D. X ___															
9	SUM COMP. DANCE AND O.D.															COMP/O.D. TOTAL SUMS
	FREE DANCE															
10	FREE DANCE „A“															
11	FREE DANCE „B“															TOTAL „B“ SCORES
12	SUM FREE DANCE															
13	FREE DANCE X ___															
	COMPULSORY, O.D. AND FREE DANCE COMBINED															
14	LINE 9 + 13															TOTAL SUMS

CALCULATOR _____

FIRS
Federation Internationale de Roller Sports

INDIVIDUAL SCORE SHEET

PAIRS

SKATERS NAME: _____

DATE: _____

SKATING ORDER: _____ SHORT _____ LONG

		Judge 1		Judge 2		Judge 3		Judge 4		Judge 5		Judge 6		Judge 7			
	SHORT PAIRS PROGRAM																
1	SHORT „A“																
2	SHORT „B“															TOTAL „B“ SCORES	
3	SHORT SUMS															TOTAL SHORT SUMS	
	LONG PAIRS PROGRAM																
4	LONG „A“																
5	LONG „B“															TOTAL „B“ SCORES	
6	LONG SUMS															TOTAL LONG SUMS	
7	LONG SUMS X 3																
	COMBINATION SHORT AND LONG PROGRAMS																
8	LINE 3 + 7															TOTAL SUMS COMBINED	

CALCULATOR _____